SPECIALISTS IN PRACTICAL PRECISION ENGINEERING™

ACCESSORIES
Model AMS-XLM
XLR 3-Pin Male Jack
Terminal block connections

- Mounts in D-Style Standard Cutouts
- Mounts in all AMS Mounting Frames
- Mounts in RDL Decora-Style Wall Plates
- Availability of a Wide Variety of Associated AMS Accessories
- Provides Flexibility for Connections and Controls

Mounted in a DB-D1
(Available Separately)

The AMS SYSTEM is a versatile product group from Radio Design Labs. The unique design allows the associated AMS accessories to mount into any standard RDL RACK-UP® or HALF-RACK mounting opening as well as other RDL mounting accessories and enclosures. These optionally available RDL rack mount, wall mount and countertop enclosures make the AMS SYSTEM accessories useful in a wide variety of installations.

APPLICATION: The AMS-XLM is a metal male XLR connector equipped with a high quality terminal block for audio connections. The connector mounts in AMS mounting frames and in standard D-style cutouts.

RDL®
Radio Design Labs

SPECIALISTS IN PRACTICAL PRECISION ENGINEERING™

ACCESSORIES
Model AMS-XLM
XLR 3-Pin Male Jack
Terminal block connections

Installation/Operation

Declaration of Conformity available from rdlnet.com.
Sole EMC specifications provided on product package.
Specifications are subject to change without notice.

STEP #1
SECURE THE AMS-XLM ONTO THE PEM STUDS WITH THE TWO NUTS INCLUDED WITH THE AMS OR DECORA MOUNTING PLATE.

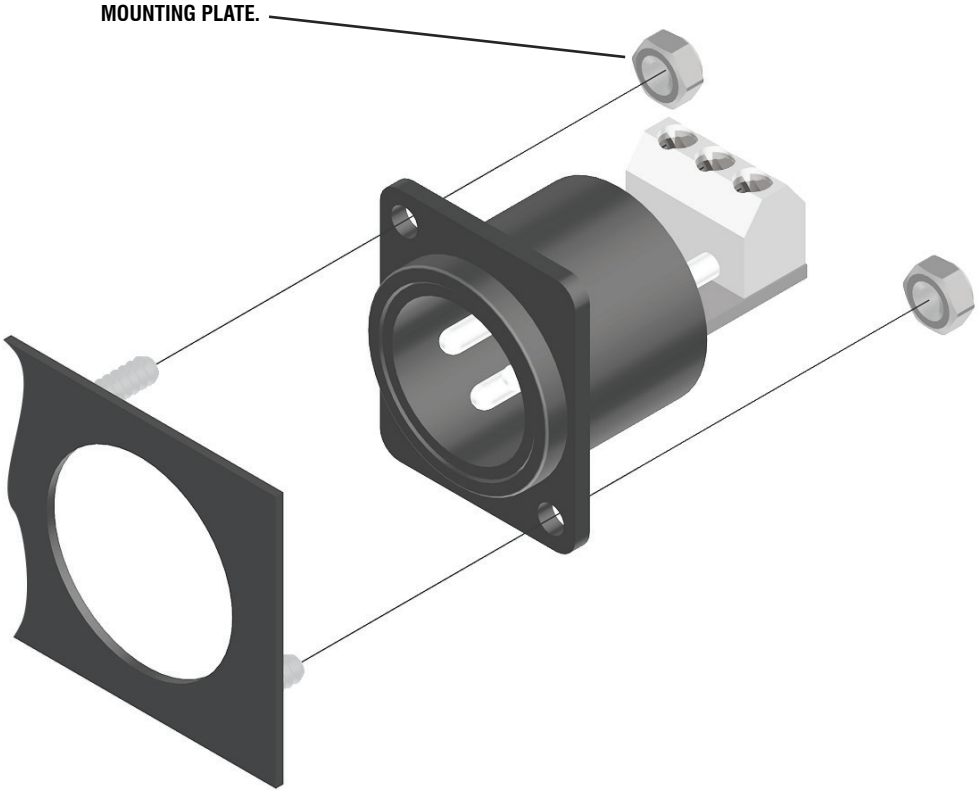

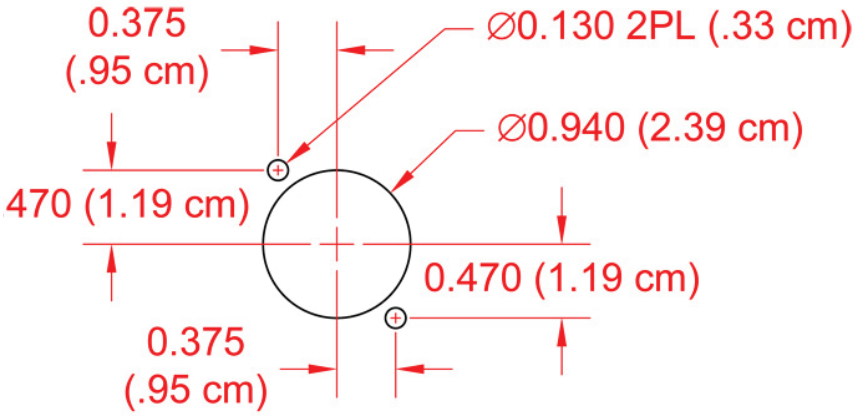

Front View
Standard D-Style Cutout Dimensions

TYPICAL PERFORMANCE

Mounting:	AMS mounts; D-Style cutouts
Depth (behind the panel):	1.35 in
Ambient Operating Environment:	-20 to 70 degrees C

rhox áudio e vídeo pro
Rhox Áudio e Vídeo Profissional - SIBS Quadra 2 conjunto C Lote 12
Brasília - DF - 71736.203 - Tel (61) 3051-5800
https://loja.rhox.com.br