Operating Manual

Multi-Mode Power Amplifiers

3,000W, 1,500W, 800W, and 400W Per Channel

Four and Two Channel Models

nX Base Series

nX3.04, nX3.02, nX1.54, nX1.52, nX8004, nX8002, nX4004, nX4002

nXe Ethernet Series*

nXe3.04, nXe3.02, nXe1.54, nXe1.52, nXe8004, nXe8002, nXe4004, nXe4002

nXp Ethernet+DSP Series*

nXp3.04, nXp3.02, nXp1.54, nXp1.52, nXp8004, nXp8002, nXp4004, nXp4002

Protea software is available for free download on the Ashly website.
Ashly no longer includes a software CD-ROM with new units.

ASHLY AUDIO INC.

847 Holt Road Webster, NY 14580-9103 Phone: (585) 872-0010
Toll-Free: (800) 828-6308 Fax: (585) 872-0739 ashly.com

All Trademarks referred to herein are the property of their respective owners.
©2017-2018 Ashly Audio, Inc. All rights reserved worldwide.

Important Safety Instructions
Consignes de sécurité à lire attentivement

The lightning flash with arrowhead symbol, within an equilateral triangle, is intended to alert the user to the presence of uninsulated "dangerous voltage" within the product's enclosure that may be of sufficient magnitude to constitute a risk of electric shock to persons. The exclamation point within an equilateral triangle is intended to alert the user to the presence of important operating and maintenance instructions in the literature accompanying the device.

1. Read these instructions.
2. Keep these instructions.
3. Heed all warnings.
4. Follow all instructions.
5. To reduce the risk of fire or electric shock, do not expose this apparatus to rain or moisture.
6. Do not use this apparatus near water.
7. Clean only with dry cloth.
8. Do not block any ventilation openings. Install in accordance with the manufacturer's instructions.
9. Do not install near any heat sources such as radiators, heat registers, stoves, or other apparatus.
10. Do not defeat the safety purpose of the polarized or grounding-type plug. A polarized plug has two blades with one wider than the other. A grounding type plug has two blades and a third grounding prong. The wide blade or the third prong are provided for your safety. If the provided plug does not fit into your outlet, consult an electrician for replacement of the obsolete outlet.
11. Protect the power cord from being walked on or pinched particularly at plugs, convenience receptacles, and the point where they exit from the apparatus.
12. Only use attachments/accessories specified by the manufacturer.
13. Use only with the cart, stand, tripod, bracket, or table specified by the manufacturer, or sold with the apparatus. When a cart is used, use caution when moving the cart/apparatus combination to avoid injury from tip-over.
14. Unplug this apparatus during lightning storms or when unused for long periods of time.
15. Refer all servicing to qualified service personnel. Servicing is required when the apparatus has been damaged in any way, such as power-supply cord or plug is damaged, liquid has been spilled or objects have fallen into the apparatus, the apparatus has been exposed to rain or moisture, does not operate normally, or has been dropped.

Le symbole de la flèche dans un triangle équilateral symbolisant la foudre est prévu pour sensibiliser l'utilisateur à la présence de tension de voltage non isolée à l'intérieur de l'appareil. Elle pourrait constituer un danger de risque de décharge électrique pour les utilisateurs. Le point d'exclamation dans le triangle équilatérale alerte l'utilisateur de la présence de consignes qu'il doit d'abord consulter avant d'utiliser l'appareil.

1. Lisez ces instructions.
2. Conservez ces instructions.
3. Observez les avertissements.
4. Suivez ces instructions.
5. Pour réduire le risque de feu ou la décharge électrique, ne pas exposer cet appareil pour pleuvoir ou l'humidité.
6. Ne pas utiliser l'appareil près de l'eau.
7. Le nettoyer à l'aide d'un tissus sec.
8. Ne pas bloquer les ouvertures de ventilation, installer selon les consignes du fabricant.
9. Eloigner des sources de chaleur tel: radiateurs, fourneaux ou autres appareils qui produisent de la chaleur.
10. Ne pas modifier ou amputer le système de la mise à terre. Une prise avec mise à terre comprend deux lames dont une plus large ainsi qu'une mise à terre: ne pas la couper ou la modifier. Si la prise murale n'accepte pas la fiche, consulter un électricien pour qu'il remplace la prise désuète.
11. Protéger le cordon de secteur contre tous bris ou pincement qui pourraient l'endommager, soit à la fiche murale ou à l'appareil.
12. N'employer que les accessoires recommandés par le fabricant.
13. N'utiliser qu'avec les systèmes de fixation,chariots, trépied ou autres, approuvés par le fabricant ou vendus avec l'appareil.
14. Débrancher l'appareil lors des orages électriques ou si inutilisé pendant une longue période de temps.
15. Un entretient effectué par un centre de service accrédité est exigé si l'appareil a été endommagé de quelque façon: si il a été exposé à la pluie,, l'humidité ou s'il ne fonctionne pas normalement ou qu'il a été échappé.

WARNING: THIS APPARATUS MUST BE EARTHED

FCC Compliance

This device complies with part 15 of the FCC Rules. Operation is subject to the following two conditions:
1. This device may not cause harmful interference
2. This device must accept any interference received, including interference that may cause undesired operation

Note: This equipment has been tested and found to comply with the limits for a Class B digital device, pursuant to part 15 of the FCC Rules. These limits are designed to provide reasonable protection against harmful interference in both a commercial and residential installation. This equipment generates, uses and can radiate radio frequency energy and, if not installed and used in accordance with the instructions, may cause harmful interference to radio communications. However, there is no guarantee that interference will not occur in a particular installation. If this equipment does cause harmful interference to radio or television reception, which can be determined by turning the equipment off and on, the user is encouraged to try to correct the interference by one or more of the following measures:

- **Reorient or relocate the receiving antenna.**
- **Increase the separation between the equipment and receiver.**
- **Connect the equipment into an outlet on a circuit different from that to which the receiver is connected.**
- **Consult the dealer or an experienced radio/TV technician for help..**

Warning:

This device is capable of producing output which can create very high sound pressure levels (SPL) from loudspeakers, which over time can lead to hearing loss.
The US Occupational Safety and Health Administration (OSHA) has published guidelines for protection against the effects of occupational noise exposure.
Please refer to the following OSHA table for safe noise exposure limits, and always take precautions to avoid excessive exposure to loud environments.

Sound level (dBA, slow response)	Maximum Duration (Hours per day)
90	8
92	6
95	4
97	3
100	2
102	1 1/2
105	1
110	1/2
115	1/4 or less

Unpacking

As a part of our system of quality control, every Ashly product is carefully inspected before leaving the factory to ensure flawless appearance. After unpacking, please inspect for any physical damage. Save the shipping carton and all packing materials, as they were carefully designed to reduce to a minimum the possibility of transportation damage should the unit again require packing and shipping. In the event that damage has occurred, immediately notify your dealer so that a written claim to cover the damages can be initiated.

The right to any claim against a public carrier can be forfeited if the carrier is not notified promptly and if the shipping carton and packing materials are not available for inspection by the carrier. Save all packing materials until the claim has been settled.

About Ashly

Ashly Audio was founded in 1974 by a group of recording engineers, concert sound professionals, and electronics designers. The first products were elaborate custom consoles for friends and associates, but business quickly spread to new clients and the business grew. The philosophy we established from the very beginning holds true today: to offer only the highest quality audio tools at an affordable cost to the professional user – ensuring reliability and long life. Years later, Ashly remains committed to these principles.

Ashly's exclusive Five Year, Worry- Free Warranty remains one of the most generous policies available on any commercial- grade product. The warranty covers every product with the Ashly brand name, and is offered at no extra cost to you.

Please read this entire manual to fully understand the features and capabilities of this product.

Table of Contents

1 Introduction 6
1.1 Amplifier Series 6

2 nX Installation Requirements 7
2.1 AC Mains Voltage, Power, and Current . . 7
2.2 Input Signal Wiring 8
2.3 Output Speaker Wiring 8
2.4 Remote Control Wiring 8
2.5 AUX Output Wiring 9
2.6 Mechanical 9
2.7 Cooling 9

3 nX Amplifier Protection 10

4 Front Panel Features (all models) . . . 10
4.1 Mounting Holes 10
4.2 Air Inflow Vents 10
4.3 Factory Reset/Sleep Mode Switch 10
4.4 Channel Attenuators 11
4.5 Channel LED Indicators 11
4.6 Amplifier Status LEDs 11
4.7 Power Switch/LED 11
4.8 Series and Model Labels 11

5 Rear Panel Features (nX Series) 12
5.1 Channel Configuration DIP Switch 12
5.2 Euroblock Input Jack 12
5.3 Remote DC Level Control 12
5.4 Combo Input Jack 12
5.5 Bridge Mode Switch 12
5.6 SpeakON® Output Jacks 12
5.7 PowerCON® AC Mains Connector 12
5.8 Serial Number Sticker 12

6 Rear Panel Features (nXe Series) . . . 13
6.1 Ethernet Port 13
6.2 Network Audio Module Option 13
6.3 Standby Contact Closure 13
6.4 Fault Logic Outputs 13
6.5 Preset Recall Contact Closure 13
6.6 Serial Data Connector 13
6.7 Aux Outputs 13
6.8 AES3 Digital Audio I/O Option 13

7 Rear Panel Features (nXp Series) . . . 14
7.1 Installed DSP 14

8 Ethernet Communications 14
8.1 IP Address 14
8.2 Firewalls 14
8.3 Wi-Fi and LAN 14
8.4 Connecting Devices 14

***NOTE: Sections 9-13 (p15-51) are NOT included in the printed manual shipped with nX amplifiers. The complete owner's manual is available as a PDF file on the Ashly Website. For best results when viewing and navigating the PDF file, enable the PDF Bookmarks.**

9 Protea^ne Software 15
9.1 Installing and Using the Software 15
9.1a Ashly Network Tree 15
9.1b Ashly Project Canvas 15
9.1c File Menu 16
9.1d Network Menu 16
9.1e Project Menu 16
9.1f Add Item Menu 16
9.1g Options Menu 17
9.1h Flash Programmer Menu 17
9.1i Load Analysis Menu 17
9.1j Help Menu 18

9.2 nX Device Options Menu 18
9.2a Flash Reprogram Mode 18
9.2b Link Group Configuration 18
9.2c Power On Delay 19
9.2d Idle Time Before Sleep 19
9.2f Factory Installed Options 19
9.2g Clear All Stored Presets 19
9.2h Sample Rate and Master Clock 19
9.2i DVCA Control 19
9.2j DSP Enable/Disable 19

9.3 nX Preset Options Menu 19
9.3a Sub Presets 19

9.4 Device Control Tabs 20
9.4a Software Control Surface 20
9.4b Security 22
9.4c Network Properties 22
9.4d DSP Control 23
9.4d - Pluggable DSP Blocks 23-38
9.4d - I/O Matrix Router 39
9.4d - Matrix Mixer and Auto Mixer . . . 39
9.4e Input Source 41
9.4f Metering 41
9.4g Event Scheduler 41
9.4h Fault Log 41

10 nX Remote Control Functions 42
10.1 On/Standby 42
10.2 Power Switch Disable 42
10.3 Front Panel Disable 43
10.4 Sleep Clock Timer 43
10.5 Preset Recall 43
10.6 Gain Control 43
10.7 Channel Mute 44
10.8 Zone Source Selection 44

11 Ashly Remote Control Devices 45
11.1 WR-1 Level Control 45
11.2 WR-1.5 Level and Preset Recall 45
11.3 WR-2 Preset Recall Switches 45
11.4 WR-5 Programmable Button Control. . 46
11.5 RD-8C Serial Data Fader Controller . . 46
11.6 neWR-5 Programmable Button Control . 47
11.7 FR-8/FR-16 Networked Fader 47
11.8 INA-1 Inline RS-232 Adapter. 47
11.9 Ashly Remote App for iPad® 47

12 AES3 Digital Audio Input/Pass-Through 48
12.1 Source Selection 48
12.2 Cable Specification. 48
12.3 Hardware Status Indicators. 48
12.4 Software Status Indicators 48

13 Network Audio Options 49
13.1 CobraNet®. 49
13.1a CobraNet Configuration 50
13.2 Dante® 51

14 nX Amplifier Troubleshooting 52

15 nX Amplifier Specifications 54

16 Limited Warranty 58

17 nX, nXe, and nXp Block Diagrams . 59

❑ 1 INTRODUCTION

Thank you for your purchase of this Ashly **nX**, **nXe**, or **nXp** power amplifier. This product uses state of the art, light weight, high power, high efficiency switching technology developed through years of design and field testing. nX amplifiers are available in the following three series, designed to meet the most demanding live sound and fixed installation sound systems in stadiums, arenas, performance venues, worship spaces and convention centers.

Series	400W @ 2 Ohm 2 and 4 channel	800W @ 2 Ohm 2 and 4 channel	1,500W @ 2 Ohm 2 and 4 channel	3,000W @ 2 Ohm 2 and 4 channel
nX - Base Series	nX4002 & nX4004	nX8002 & nX8004	nX1.52 & nX1.54	nX3.02 & nX3.04
nXe - Ethernet Series	nXe4002 & nXe4004	nXe8002 & nXe8004	nXe1.52 & nXe1.54	nXe3.02 & nXe3.04
nXp - Ethernet + DSP	nXp4002 & nXp4004	nXp8002 & nXp8004	nXp1.52 & nXp1.54	nXp3.02 & nXp3.04

- **nX - Base Series Standard Features**

- Two or four channel high power, lightweight amplifier design
- Individually configurable speaker outputs for Low-Z (to 2 Ohm), or High-Z (70V or 100V) via rear panel dip switches
- Front panel power switch and level controls, defeatable
- Front panel LEDs for temperature, current, signal, clip, mute, bridge mode, protect, sleep, and disable
- Combo XLR - 1/4" jack and Euroblock connectors on all inputs
- SpeakON® twist locking loudspeaker connectors for security, safety, and reliability
- Back panel DIP switches per-channel for selection of hipass filter, limiter, input gain, and speaker output configuration
- Remote DC level control per channel
- Automatic selection of 110-120VAC or 220-240VAC operation, 50-60Hz, with detachable PowerCON® AC connector
- Power-saving automatic sleep mode, less than 1W, defeatable
- Continuously variable cooling fan
- Extensive protection circuitry
- Independent amplifier and power supply circuitry
- Five year warranty

- **nXe - Ethernet Series Additional Features**

- Ethernet control and monitoring of amplifier functions, with front panel COM activity LED
- iPad® "Ashly Remote" application available for custom design of end user wireless control interface
- Serial data port for Ashly serial remote control devices such as the WR-5 or RD-8C
- Optional RS-232 data converter for third party controllers such as Crestron
- Software defeatable power switch and level controls
- Standby mode, 30% reduction from idle, triggered on or off by contact closure, software control, or event scheduler
- Programmable power-on delay for Off-to-On or Sleep-to-On transitions
- Preset recall via contact closure, software control, remote control, or event scheduler
- Aux preamp outputs
- Fault condition logic outputs
- Optional Cobranet® or Dante® network audio and AES3 digital audio input with zero-latency pass-through

- **nXp - Ethernet + DSP Series Additional Features**

- Protea DSP including dynamics, gain, EQ, feedback suppression, FIR filters, matrix and auto-mixer, crossover, delay, and more
- Impedance monitoring of individual amplifier outputs for quick and easy diagnosis of potential speaker problems
- iPad control of select DSP functions including gain, mute, matrix, A/B source select, PEQ filter level, and meters
- Networkable remote gain and zone control using Ashly neWR-5 and FR-8/16

❑ 2 nX INSTALLATION REQUIREMENTS

Before connecting to AC mains power, make sure that the mechanical installation, cooling requirements, wiring, controls, and software are all set to the configuration needed for your particular application. Failure to do so could result in damage to the unit or to other components in the system.

2.1 AC Mains Voltage, Power, and Current Requirements

This amplifier will auto-detect AC mains voltage of 110-120VAC or 220-240VAC, 50-60Hz. At nominal 120VAC mains, the allowed operating range is 70-135VAC to allow for brownouts or power surges, and for nominal 240VAC operation the range is 140-270VAC. Use only the provided AC cord or equivalent to connect to AC mains. Programmable Power-On Delay is available on nXe and nXp series amplifiers. All nX models have a fixed, non-defeatable warm-up delay of about three seconds to protect against excessive in-rush current when first powered up or when waking from sleep. The model number and power consumption are indicated on the back panel label placed above the AC inlet. To reduce the risk of ground loop hum, all sound system ground references should originate at the same AC power distribution point. *Do not lift or remove the amplifier power cord ground pin.*

AC Mains Connector Types - The following table shows the AC mains plug type supplied with each nX amplifier model, as well as the required receptacle. A detachable 20A Neutrik PowerCON® mains chassis connector is installed on all models except for nX 3.04, which uses a 30A PowerCON®.

	nX4002	nX4004	nX8002	nX8004
120V Plug/Receptacle	Nema 5-15	Nema 5-15	Nema 5-15	Nema 5-15
240V Plug/Receptacle	Schuko 16A	Schuko 16A	Schuko 16A	Schuko 16A

	nX1.52	nX1.54	nX3.02	nX3.04
120V Plug/Receptacle	Nema 5-15	Nema 5-20	Nema 5-20	Nema L5-30 (locking)
240V Plug/Receptacle	Schuko 16A	Schuko 16A	Schuko 16A	Schuko 16A

Total Mains Power Draw and Maximum Current Draw - Total AC power consumption and maximum

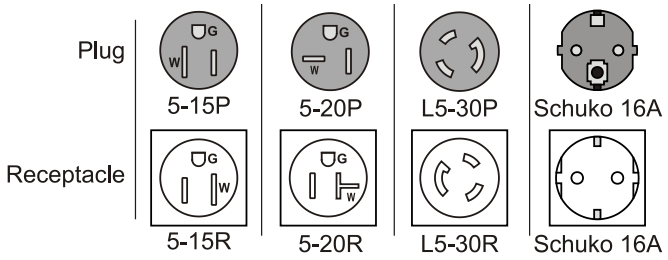

120VAC current draw are shown below, measured at 1/8th maximum output power under typical amplifier status and load conditions, all channels driven using typical audio signal. For 240V current, divide 120V values in half.

Total Power Draw (Maximum Current@120V)	nX4002	nX4004	nX8002	nX8004	nX1.52	nX1.54	nX3.02	nX3.04
Sleep	<1W(100mA)	<1W(100mA)	<1W(100mA)	<1W(100mA)	<1W(100mA)	<1W(100mA)	<1W (100mA)	<1W (100mA)
Standby	25W(0.38A)	40W(0.70A)	25W(0.38A)	40W(0.70A)	40W(0.70A)	70W(1.30A)	40W (0.70A)	70W (1.30A)
Idle (no input signal)	40W(0.70A)	70W(1.30A)	40W(0.70A)	70W(1.30A)	55W(1.0A)	100W(1.85A)	55W (1.0A)	100W (1.85A)
1/8th Max Power @70V	190W(2.6A)	375W(5.0A)	345W(4.6A)	685W(8.8A)	625W(8.0A)	1250W(16.0A)	940W (12.1A)	1880W (24.1A)
1/8th Max Power @100V	190W(2.6A)	375W(5.0A)	345W(4.6A)	685W(8.8A)	520W(6.7A)	1040W(13.4A)	520W (6.7A)	1040W (13.4A)
1/8th Max Power @8 Ohm	190W(2.6A)	375W(5.0A)	345W(4.6A)	685W(8.8A)	520W(6.7A)	1040W(13.4A)	520W (6.7A)	1040W (13.4A)
1/8th Max Power @4 Ohm	190W(2.6A)	375W(5.0A)	345W(4.6A)	685W(8.8A)	625W(8.0A)	1250W(16.0A)	770W (9.9A)	1540W (19.7A)
1/8th Max Power @2 Ohm	190W(2.6A)	375W(5.0A)	345W(4.6A)	685W(8.8A)	625W(8.0A)	1250W(16.0A)	1150W (14.7A)	2300W (29.5A)

2.2 Input Signal Wiring

Use shielded wiring for balanced or unbalanced audio signals. Shielding which is properly grounded will protect the signal from outside electrical interference such as RF, fluorescent lighting, and computer/display emissions. Unbalanced or single-ended (tip-sleeve) lines of less than 10 feet are generally ok, but for greater distance or noisy field environments, *always* use balanced signal.

Each channel's Euroblock, 1/4" phone jack, and XLR inputs are wired in parallel, with XLR pin 2 (+) and pin 3 (-). When using an unbalanced input, wire the hot signal to the input (+) euroblock pin, phone jack tip, or XLR pin 2, and also be sure to wire the input (-) pin, phone jack ring, or XLR pin 3 to ground. *Do not leave the (-) input unconnected.* Avoid running low level signal wires in close proximity or parallel to long speaker cables, AC power cables, or power transformers, as they can induce hum or oscillation.

2.3 Output Speaker Wire

Note: The sound system installer is responsible for using loudspeaker wiring that is in compliance with local electrical code. The following recommendations for speaker wiring are based on UL 60065 section 5.2-d and the US National Electrical Code Article 725. These are only guidelines, consult your local code for specific up to date requirements.

Class 2 wiring is typically used when the maximum measured open-circuit speaker output voltage is less than 120V r.m.s. **Class 3 wiring** is typically used if the measured open circuit output voltage exceeds 120V r.m.s, such as when 70V, 100V, or low-Z amplifiers are used in bridged mode. See section 15 for specific model configurations that may require Class 3 speaker wiring.

Output Speaker Connectors: nX amplifier speaker outputs use Neutrik SpeakON connectors because they are safe, secure, reliable, and fully enclose any hazardous voltage.

Wire guage: nX amplifiers are capable of delivering high levels of output current, so the wire gauge used for speaker outputs is important. Inadequate wire gauge, especially over long distance, adds significant resistance to the speaker's own impedance, reducing the power which is actually delivered to the speaker. It could also result in a decreased damping factor and potential fire hazard. Since power at the speaker load is of primary concern in system design, refer to the table below to best determine appropriate wire gauge for your application. The following table lists the resistance per 100 feet of common copper wire gauges, and also lists the percentage of the speaker load power which would be lost as heat in an arbitrary 100 ft run of different gauges of 2-conductor copper speaker wire.

Wire gauge resistance/power loss for 100ft speaker cable

Wire Gauge	Ohms/100ft	8 Ohm load	4 Ohm load	2 Ohm load
#8	0.0605 Ohms	0.8%	1.5%	3%
#10	0.1018 Ohms	1.3%	2.5%	5%
#12	0.1619 Ohms	2.0%	4.0%	8%
#14	0.2575 Ohms	3.2%	6.4%	12.8%
#16	0.4094 Ohms	5.1%	10.2%	20.4%
#18	0.6510 Ohms	8.1%	16.3%	32.6%

This table expresses the power loss as a percentage of the load's power rather than the total amplifier output power in order to accurately determine power loss at other cable lengths. For example, if you plan to deliver 150 watts to an 8 Ohm load through 50 ft of 14 ga. cable, the power loss in the cable would be half that of a 100 ft run of #14 wire as shown in the table, or 1.6% of 150W, which is an insignificant 2.4 watts. However, if you were to run 200 ft of 18 ga. cable to a 2 Ohm load, the loss would be twice that of the 100 ft run shown in the table, or 65.2% of 250W, which is 163 watts lost as heat. Always be sure to use adequate gauge speaker wire.

2.4 Remote Control Wire

Remote DC level control (all models) - Unshielded bell or telephone wire is sufficient for DC level control, as is CAT5 cable. The V+ and GND pins from one amplifier channel *can* be shared with other remote DC level controls wired to the same amplifier, however *do not connect this ground to any external grounds.*

Remote Standby (nXe and nXp only) - This is a logic level signal, use unshielded low gauge wire.

Fault (nXe and nXp only) - This is also a logic level signal, unshielded low gauge wire is adequate.

Preset (nXe and nXp only) - This is also a logic level signal, unshielded low gauge wire is adequate.

Data (nXe and nXp only) - Four conductor telephone wire is suitable, as well as CAT5, but if shielded wiring is used be sure to ground the source end of the shield. *Under no circumstances should shielding be left unconnected to ground, as the added line capacitance will degrade the data signal.* Maximum data cable distance is 1,000 ft (305m).

2.5 Aux Output Wiring (nXe and nXp only)

The aux outputs are pseudo-balanced, meaning they use single ended signal (+) but with balanced impedance, and can be wired balanced or unbalanced. *Always use shielded cable for audio signals.*

2.6 Mechanical

Each amplifier model is 2RU, and is designed to fit in a standard 19-inch equipment rack. Use four screws when mounting the amplifier to the front rack rails. Rear support is recommended for mobile or touring use (see mechanical drawing below). In some installations where the sound system is exposed to a high level of RF noise or system-induced oscillation, it may be necessary to ground the amplifier's chassis to the rack enclosure. This is accomplished using star type lockwashers on the four rack mounting screws, placed between the amplifier chassis and the rack rails. These star washers will penetrate through the amplifier and rack rail finish to adequately ground the chassis to the rack.

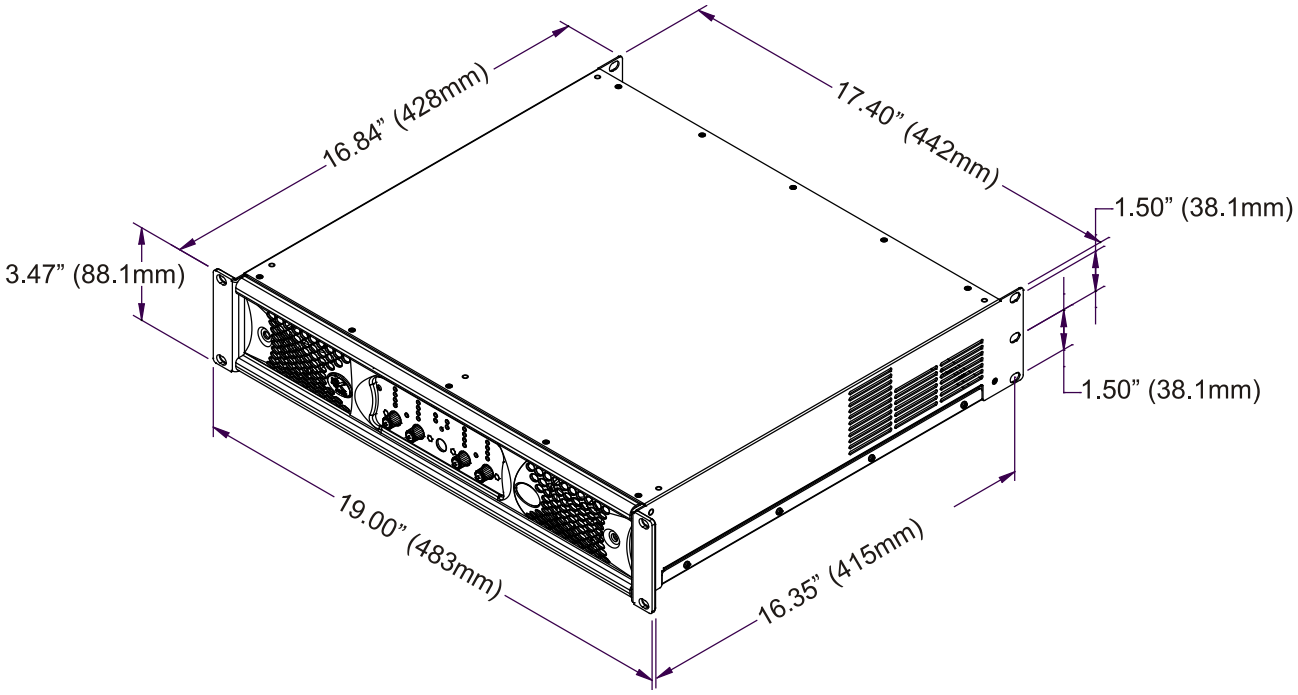

2.6 nX Dimensional Drawing

2.7 Cooling

Air vents on the amplifier front and side panels must have access to free flowing room temperature air. Cool air is drawn in through the sides and blown out the front. It is not necessary to leave empty rack spaces above or below the amplifier. See the BTU/hr chart below for amplifier thermal output characteristics.

Maximum Thermal Output in BTU/hr

Maximum BTU/hour (Maximum Current@120V)	**nX4002**	**nX4004**	**nX8002**	**nX8004**	**nX1.52**	**nX1.54**	**nX3.02**	**nX3.04**
Sleep	<3.4	<3.4	<3.4	<3.4	<3.4	<3.4	<3.4	<3.4
Standby	85	136	85	136	136	238	136	238
Idle (no input signal)	136	238	136	238	187	340	187	340
1/8th Max Power @70V	305	595	495	970	850	1700	1110	2220
1/8th Max Power @100V	305	595	495	970	710	1420	710	1420
1/8th Max Power @8 Ohm	305	595	495	970	710	1420	710	1420
1/8th Max Power @4 Ohm	305	595	495	970	850	1700	905	1810
1/8th Max Power @2 Ohm	305	595	495	970	850	1700	1360	2720

❑ 3 nX AMPLIFIER PROTECTION

Power-On Delay -All models have a three second warm-up delay to prevent excessive in-rush current when first powered on or awakened from sleep. nXe and nXp models additionally offer programmable Power-On Delay of up to 25 seconds (see section 9.2).

Thermal Protection - Cooling fans are continuously variable, reaching their maximum speed when an amplifier channel reaches 80% of it's safe operating temperature, also turning on theTemp LED. At 90%, the Protect LED turns on to indicate countermeasures have been applied to attenuate the input signal to the overheating channel. A Temp LED turns on dim at first, then increases in brightness as the amp channel approaches maximum safe temperature. 100% critical temperature will shut down the amplifier.

Overpower Protection - To protect internal components against overpower conditions, a protection scheme in each output stage reduces audio output power until the fault condition is no longer present.

Output DC and Rail Fault Protection – Output DC on any channel will trigger the Protect LED and mute that channel. Voltage rail irregularities such as power supply pumping are also detected and compensated for in real time as the amp runs.

AC Mains - If the AC Mains line voltage exceeds or falls below the specified operating range, the amplifier will temporarily shut down. It will automatically restart as soon as the AC line voltage returns to the specified range.

For details on these and other amplifier protection schemes, plus their LED codes, refer to Troubleshooting in section 14.

❑ 4 nX FRONT PANEL FEATURES (all models)

4.1 Mounting Holes – For mounting to a 19" equipment rack.

4.2 Air Vents – Cool air enters in through the amplifier sides and is vented out the front.

4.3 Reset/Sleep Mode/Disable Switch – This recessed switch is used to reset the amplifier to its default factory settings, however it will not erase amplifier presets. Protea^{ne} software must be used to erase amplifier presets (sec 9.2g). This switch is also used to set sleep mode and front panel disable status (see below).

To reset amplifier settings, routing, networking, and security (not presets) to original factory defaults, use a plastic paper clip or equivalent to press and hold the switch *during power up* until all channel LEDs sequence from bottom to the top. Release the switch before the LED sequence is complete to cancel the process. Upon completion, all LEDs turn off and the amplifier resumes normal operation.

Setting Sleep and Front Panel Disable Mode - The factory reset switch is also used to select one of four sleep and front-panel-control-disable modes as illustrated to the right. The default status is Sleep and Disable OFF (**Mode 1**). To advance to the next mode, press and hold this switch when the amplifier is fully on, and the four mode combinations will cycle and repeat. To select a mode, simply release the switch when the desired mode is displayed.

The Disable LED is lit any time the front panel controls are disabled, either by selecting disable mode from this switch or using software control.

The sleep LED turns on during the mode-select cycle whenever sleep mode is enabled, but turns back off as soon as the switch is released, remaining off unless the amp actually goes to sleep. The current sleep mode status can be displayed when the amp is fully on by quickly pressing and releasing the reset switch. If the sleep LED lights, sleep mode is active.

Mode	Amp Status LEDs	
1 Disable - OFF Sleep - OFF	PROTECT ○	○ DISABLE
	SLEEP ○	○ COM
2 Disable - OFF Sleep - ON	PROTECT ○	○ DISABLE
	SLEEP ●	○ COM
3 Disable - ON Sleep - ON	PROTECT ○	● DISABLE
	SLEEP ●	○ COM
4 Disable - ON Sleep - OFF	PROTECT ○	● DISABLE
	SLEEP ○	○ COM

4.3 - Factory Reset Switch Sleep/Disable Modes

4.4 Channel Attenuators – These control the input signal level to the amplifier, and work in conjunction with the remote DC fader level controls and the software control surface fader controls (if the amp is networked). When an input attenuator is turned fully off, it's red Clip/Mute LED turns on and stays on to indicate mute status for that channel. The front panel attenuators can be disabled, along with the power switch, using the factory reset switch as shown in section 4.3 or using software.

4.5 Channel LED Indicators

BRIDGE - This green LED indicates when the channel pair is configured to BRIDGE mode from the back panel switch. Only the odd numbered input and level control for that channel pair is used.

TEMP - This yellow LED turns on when an amplifier channel has reached an operating temperature that is 80% of it's maximum safe range, and the cooling fan(s) are at their maximum speed. The LED lights dimly at first and will glow brighter if the temperature increases.

CURRENT - This green LED lights proportionately with the output current delivered to the speaker load.

SIGNAL - This green LED lights when the output voltage reaches -18dB from full output.

CLIP/MUTE - *CLIPPING*: The red LED indicates clipping when speaker output is 1dB below rated output, or when the input preamp signal is clipped. *MUTE*: The LED indicates mute when the channel is muted or when it's level control is fully attenuated. Additionally, the Clip/Mute LED is used along with the Protect LED to indicate an output DC fault (see section 14).

4.6 Amplifier Status LEDs

PROTECT - The red Protect LED initially turns on to indicate that real-time countermeasures are being applied to overpower, overtemperature, or rail voltage fault conditions while the amp is still running. If those countermeasures are unsuccessful and the amplifier protects itself by shutting down, the Protect LED remains on and the amplifier's power must be cycled before resuming normal operation. The exception to this is when the amp shuts down due to the AC Mains voltage being out of range, in which case the amp automatically restarts as soon as the AC mains line voltage returns to the specified operating range. See section 14 for full details.

SLEEP - This blue LED indicates that the amplifier is asleep. Sleep mode can be enabled as a power saving feature that shuts down most amplifier circuits after a period of audio inactivity, reducing the amplifier's power consumption to less than 1 Watt. An amplifier is awakened when there is audio signal present again, or when the power switch is pressed. Because the real-time-clock is also shut down during sleep mode, the amplifier cannot be awakened by any software function, including the event scheduler.

Sleep mode is normally disabled, therefore must be enabled by the user. On nX series, the sleep clock timer is fixed at 30 minutes, and is enabled by toggling through the four mode conditions of the factory reset switch as detailed in section 4.3. On networked nXe and nXp series, the sleep clock timer also defaults to 30 minutes, but is programmable under [Device Options] with a range of 1-120 minutes. In all models, the presence of input signal above -24dBu (0.05Vrms) or pressing the power switch will return the amplifier to normal operation. On all models, a fixed amplifier turn-on delay of three seconds is necessary to manage in-rush current during power-up or waking from sleep. Sleep mode has priority over standby mode.

DISABLE - This yellow LED lights when the front panel power switch and level controls have been disabled. All front panel controls are disabled together using the factory reset switch as described in section 4.3, or in software using the amplifier's main control surface (see section 9.4a).

COM - For nXe and nXp models only, this green LED lights whenever network communication occurs. Secondly, the COM LED flashes for two seconds when the <Identify Device> software button for that device is clicked. (see section 9.1i) Lastly, the COM LED becomes lit (along with the flashing power switch LED) during flash reprogram mode.

4.7 Power Switch/LED – This switch is used for powering the amplifier on or off or waking the amplifier from sleep. The white switch LED lights solid when the amplifier is on, and flashes when in standby mode (nXe and nXp only). The power switch can be disabled using the factory reset switch actions described in section 4.3, or disabled from software (nXe and nXp only). The three possible power switch LED conditions are:

1) Fully lit: The amplifier is powered up, even if the power switch has been disabled, in which case the disable LED will be on.

2) Flashing: The amplifier is in standby mode, or is in flash reprogram mode when the COM LED is also lit.

3) Fully off: The amplifier is either completely off, or it is in sleep mode, in which case the blue sleep LED will be on.

4.8 Series and Model Labels – The label on the left indicates the amplifier series, nX, nXe, or nXp. The label on the right shows the amplifier model name.

❑ 5 nX SERIES REAR PANEL FEATURES

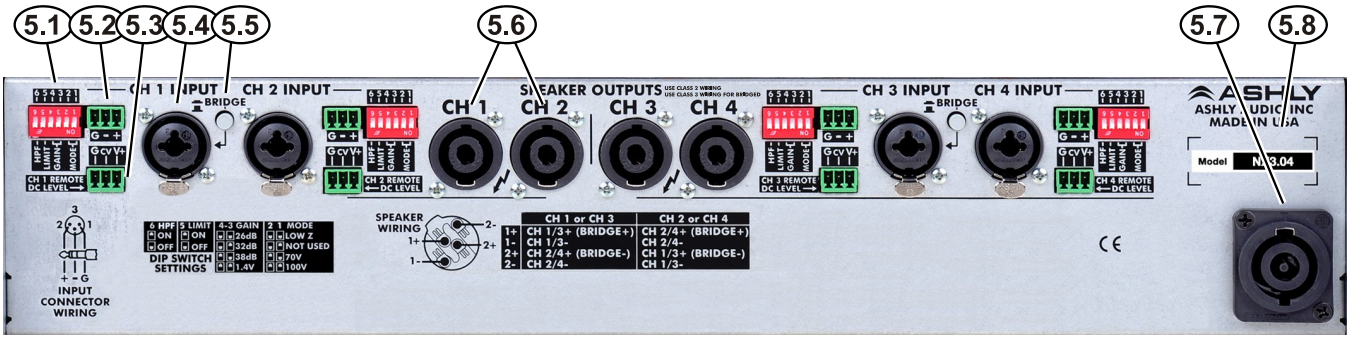

5.1 Channel Configuration DIP Switch - The DIP switches configure each channel's 80Hz 2nd Order Hipass Filter, Output Clip Limiter, Amplifier Gain, and Output Mode. In the example to the right, the DIP switch is set as follows: **6**: 80Hz High Pass Filter is Off; **5**: Clip Limiter is On; **4&3**: Gain is 1.4V; **2&1**: Output Mode is Low Z.

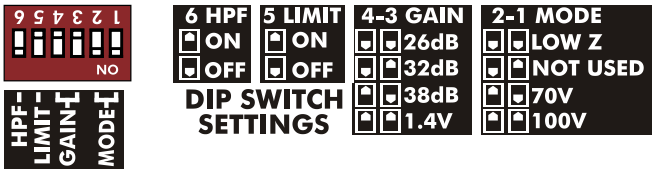

5.1 Channel Configuration DIP Switch

Note: The Gain setting of 1.4V means that a 1.4V input will drive the amp to full output in any output mode. The other three Gain settings will apply their respective amplifier gain regardless of output mode, so the actual input voltage required to fully drive the amp will vary based on the selected output mode.

5.2 Euroblock Input Jack - Used for wiring a balanced input. If using an unbalanced signal, wire the input signal to the (+) pin, the shield to (G), and wire the (-) input pin to ground. Euroblock pins are wired in parallel to the 1/4" TRS and XLR combo jack.

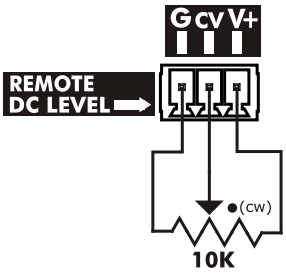

5.3 Remote DC Level Control

5.3 Remote DC Level Control - Each channel has a potentiometer circuit available for remote DC Level Control. The example to the right illustrates a typical DC level control application. There is no limit to wire length, but do not use any other ground source. If multiple remote DC level controls are used for different channels, the same ground and V+ sources can be shared.

5.4 Combo Input Jack - The combination 1/4" TRS and XLR jack (pin 2 hot) is wired in parallel to the euroblock input. Do not float the TRS ring or XLR pin 3, connect it to (-) signal or to ground (if unbalanced).

5.5 Bridge Mode Switch - This switch places an adjacent channel pair into bridge mode, combining two amplifier outputs for more power to a single speaker load. Bridge mode uses only the odd numbered input channel and level control, disabling the even numbered input. Speaker outputs for bridge mode must be wired according to the chart shown to the right. The bridge mode switch button can be removed for added security by pulling it straight off.

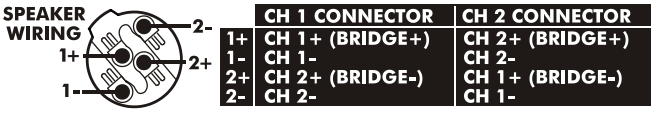

5.6 Speakon Wiring: Two channel amplifiers

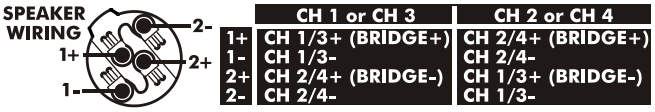

5.6 Speakon Wiring: Four channel amplifiers

5.6 SpeakON® Output Jack Wiring - SpeakON output jacks provide safe, secure, and reliable loudspeaker connections, preventing external contact with potential hazardous voltage. See the speaker wiring diagram above or on the amplifier back panel for SpeakON pin connections and channel assignments for normal or bridge mode speaker wiring. See sec 5.5 to use bridge mode.

5.7 PowerCON® AC Mains Connector - Always use the AC cord provided by Ashly for connecting to mains power. The amplifier auto-detects mains voltage from 120VAC to 240VAC. **WARNING: Do not remove or lift the mains connector ground.**

5.8 Serial Number Sticker - This sticker identifies the product model number, serial number, MAC address (if network-able), and AC mains current/power rating.

❑ 6 nXe SERIES REAR PANEL FEATURES

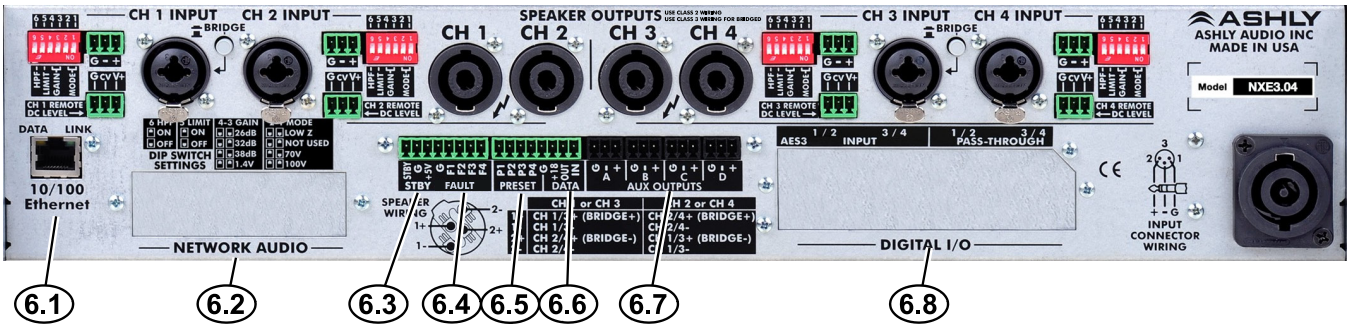

The following nXe features are in addition to standard features found in nX series amplifiers:

6.1 Ethernet Port - This RJ-45 connector offers Ethernet control and monitoring of the amplifier using Protea[ne] software. See section 8 in this manual for details on Ethernet communications.

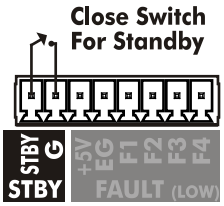

6.3 Standby Circuit

6.2 Network Audio - This is for an optional factory installed CobraNet or Dante network audio module on nXe and nXp models. See section 13 for details.

6.3 Standby Contact Closure - The STBY pin, when connected to the ground pin (G) as shown, will remotely place the amp into standby mode. When the connection is opened, the amplifier returns to normal operation. The front panel power switch will flash when the amplifier is in standby.

6.4 Fault Pins - A fault logic output pin is available for each amplifier output channel. Fault pins are used to drive external LEDs or connect with equipment that can remotely monitor or respond to a serious amplifier problem. A fault is indicated by the loss of a normally present "heartbeat" signal, where the output continuously toggles between 0V and +5V at a 1Hz rate.

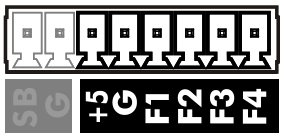

6.4 Fault Pins

The normal heartbeat signal on each fault pin is interrupted whenever a fault condition prevents normal function of that channel while the amplifier is either powered on or in the standby state. Fault conditions include loss of AC mains voltage, excessive internal temperature, power supply voltage out of range, DC on output, or microprocessor malfunction. A fault pin output can directly drive an LED as shown in the circuit illustration to the right.

If a fault occurs, fault pin output may be latched <Low> or <High> depending on the type of fault or state of the output at the moment the fault occurred. A fail-safe fault detection circuit should monitor and respond only to the loss of the 1Hz heartbeat signal.

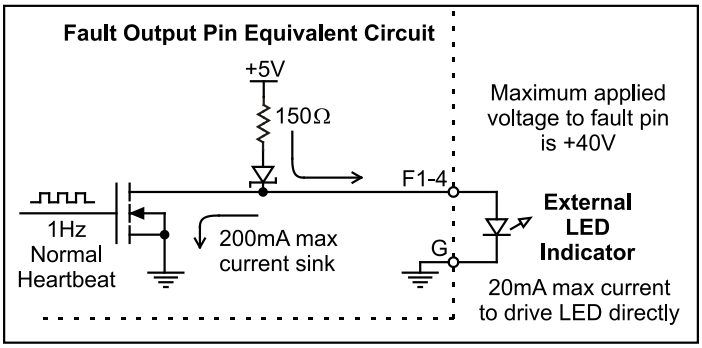

6.5 Preset - Each pin (P1 through P4) can be connected to the adjacent ground pin (G) via Ashly's WR-2 remote or other contact closure to recall a stored preset or sub preset from the amplifier. Preset pins 1-4 correspond directly to amplifier presets 01 - 04.

6.6 Serial Data Connector - These four pins (G, +18, OUT, IN) are for connecting a serial data remote control such as an Ashly WR-5 or RD-8C. Ashly also offers an in-line converter called the INA-1 which allows the data port to be used with third party RS-232 controllers. A technical RS-232 protocol document is available on the Ashly website for third party developers. See more data remote control application details in section 10.

6.7 AUX Outputs - These Euroblock connectors provide preamp signals for driving other amplifiers. See the block diagram on page 59 for the differences between two and four channel amplifier AUX outputs. AUX outputs are pseudo-balanced, meaning they use single ended signal with balanced impedance, and can be wire balanced or unbalanced.

6.8 AES3 Digital Audio I/O Option - This is used for Ashly's two or four channel AES3 input and pass-through module, available as a factory installed option on nXe and nXp models. See section 12 for AES3 details.

❑ 7 nXp SERIES REAR PANEL FEATURES

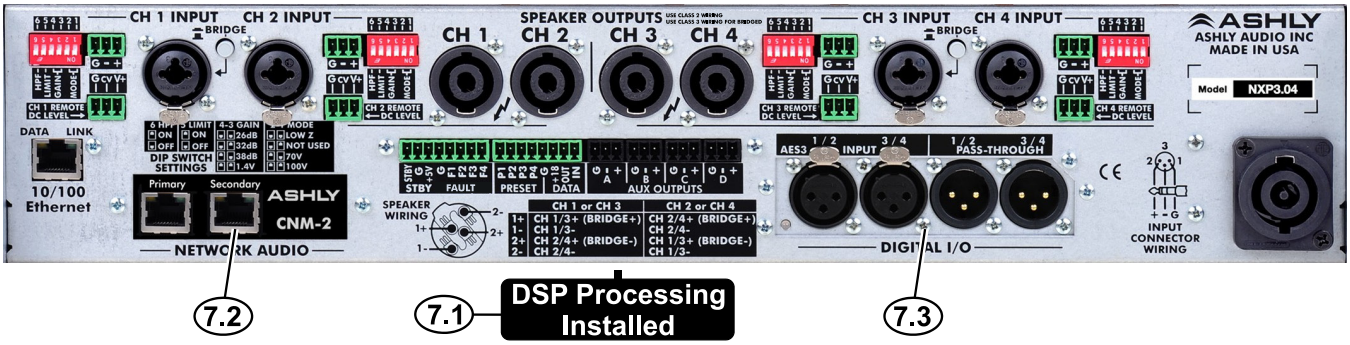

**The following nXp features are in addition to all of standard features found in nX and nXe series amplifiers:*

7.1 Installed DSP - Factory installed DSP allows for comprehensive signal processing of amplifier signals (section 9.4d) as well as loudspeaker load impedance analysis (section 9.1i).

7.2 Network Audio - CobraNet or Dante network audio modules can be factory installed in nXe or nXp models.

7.3 AES3 Digital Audio I/O - AES3 digital audio module can be factory installed in nXe or nXp models.

❑ 8 ETHERNET COMMUNICATIONS (nXe and nXp models only)

Ethernet communication is made by connecting the amplifier directly to a PC running Protea^{ne} software or connecting through a network router, switch, hub, or patch panel using Cat-5, Cat-5e, or Cat-6 wiring. Maximum Ethernet cable distance is 100 meters (328 ft). Ashly nXe and nXp amplifiers will adapt to either a straight through pin to pin or crossover Ethernet cable. *For wireless iPad control using a custom "Ashly Remote" user interface, the iPad must be connected to a wireless access point that is connected to the same network (subnet) as the amplifier.*

8.1 IP Address - There is no need to assign an IP address to nXe amplifiers. The router or Link Local Addressing will assign IP addresses to each device automatically.

When a router is not available, each amplifier will acquire it's own IP address based on Link Local Addressing. This allows the device to operate without the need to set up static IP address. If the only option is to use an Ethernet switch instead of a router, and communications problems remain which cannot be solved with the use of the link local standard, each device can have a static IP address assigned from within Protea^{ne} software. This is done by selecting “Manual Configuration” in the Network Properties tab of each device, where the system/network administrator must assign each product its’ own unique static IP address, each with the appropriate sub net if applicable.

8.2 Firewalls - If Protea^{ne} software does not detect the amplifier or show real time changes, the firewall in the host PC may need to have Protea^{ne} software added to its firewall exceptions, since firewalls may block the amplifier response to the PC. The current PC firewall status is found by clicking on the Windows Start button, then Control Panel, then double clicking on the security shield where firewall exceptions are configured.

8.3 Wi-Fi and LAN – For the initial device auto-configuration process, any secondary Wi-Fi connection should be disabled on the PC, and the LAN (Local Area Network) connection must be enabled on the PC. Secondary network connections may confuse the auto device discovery process. Go to the Windows Control Panel, then Network Connections, to disable any secondary network connections. Once communications with the device is established, secondary network connections can be enabled again.

8.4 Connecting Device(s) - Connect the Ethernet cable from the PC or network to the amplifier. If a successful Ethernet connection has been made, a solid green LED (Link) lights up on the amplifier's RJ-45 Ethernet port. If there is no green LED showing, there is either a problem with the cable or the network source which must be addressed before proceeding further. All RJ-45 Ethernet ports flash green when active, so backtrack through any other cables, routers, or switches to find the problem. The flashing yellow LED (Data) indicates that data is flowing to or from the amplifier.

❑ 9 PROTEA™ SOFTWARE

9.1 Installing and Using the Software

Ashly Protea software is available for free download from the Ashly website's software section. There is no longer a CD-ROM included with new units. After downloading, installing, and launching the program, the startup screen will appear as shown to the right, with Ashly Network Tree, Project Canvas, and Menu items described below:

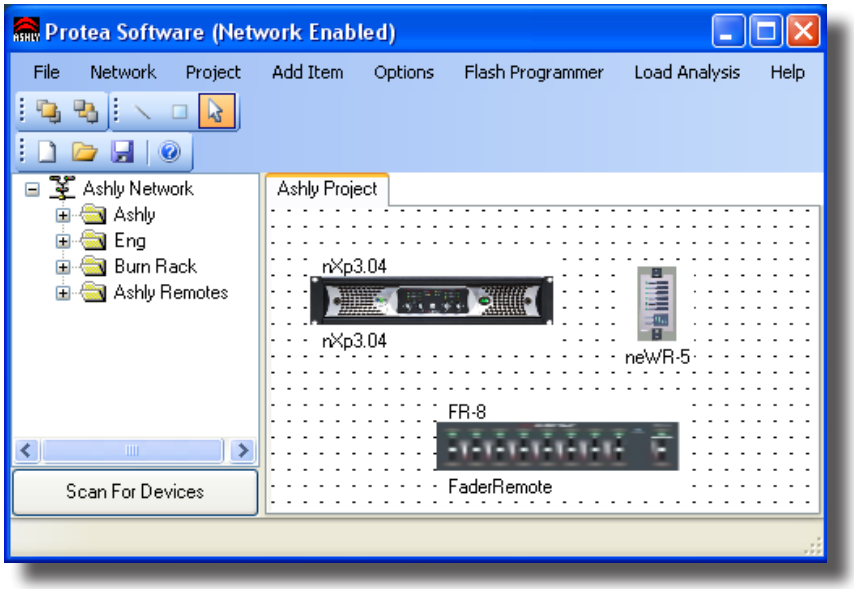

9.1 - Protea^ne Software Startup Screen, Device Tree, and Project Canvas

9.1a Ashly Network Tree - The Ashly Network device tree on the left side of the software start-up screen is an accurate reflection of all Ashly devices currently installed on available networks. A green device name means it is a live device, a red device name means it was previously installed but is now off-line, and a yellow device name means it is live but configured incorrectly. All Ashly devices broadcast their availability to the software when they start up. The user can also manually scan for devices with <Scan For Devices> found below the network device tree.

Devices can be dragged from the device tree and placed onto the project canvas as icons to simulate rack installation groups, or be added as virtual devices using the [Add Item] menu command with [Design Mode] checked On. Editing a device can be done from either the device tree or from it's representative icon on the canvas. All software changes made to a live device are executed in real time.

The software automatically detects and displays controls for any installed device options. DSP, CobraNet, Dante, and AES3 are currently available, AVB network audio will be available in the future.

Note: The user can find and verify a live device on the network by right clicking over the unit's name or icon, and then click <Identify> which will flash the device's Com LED for two seconds.

9.1b Ashly Project Canvas - The project canvas is used to represent a sound system installation as a visual project. Networked devices can be dragged from the Network Tree onto the canvas and configured. Virtual devices can be added to the canvas as well, configured, and later assigned to a live device (see section 9.1f). Live networked devices appear with a green border, off-line network devices have a red border, and virtual devices appear without any border. The primary canvas is always called "Ashly Project", but additional project files can be saved under different names.

Additional visual control objects such as level faders, LEDs, meter bars, preset, standby, mute, and source select buttons can be placed on the canvas and assigned to control a specific parameter on one or more devices in the project. Use [Add Item>Control Objects>(object)] to place a control object on the canvas, then double-click or right-click to edit its properties. Use [Add Item>Display Objects>] to place an image or text on the canvas. Additional drawing tools are found in the upper left corner above the canvas and include lines and rectangles. The user can alternately right click anywhere on open canvas to add items. Checking <Design Mode> allows placed objects to be moved around, while unchecking <Design Mode> locks objects in place.

9.1c File Menu - A project file (*.cpj) contains a snapshot of all current settings for live and virtual Ashly devices. It also contains stand-alone control objects and their settings, as well as drawn or linked graphical objects placed on the project canvas.

[File>Open Project] - opens a project file (*.cpj) from the computer

[File>Save Project] - saves all data on the project canvas, and can additionally save all presets on devices in the project

[File>New Project] - clears the canvas, clears all data, and clears all project tabs other than the "Ashly Project" tab

[File>Print Setup] - This determines the target printer for an individual device's parameter settings report, available by right-clicking on any live device in the device network tree. All current device settings are written into the printable report.

[File>Warnings] - These three software warning messages can be turned off; <DSP Channel Disable>, <Sampling Frequency Change>, and <DSP Full>. Ashly recommends leaving all three warning messagess turned on.

[File>Log] - The Log Control allows the user to adjust what parameters are logged to the Ashly Event Logger, which maintain a log of all changes made to a Protea^{ne} System while Protea^{ne} Software is running. For most users this is not important; however, this does allow a user to know what has happened in the past to the system. The Event Logger uses the Windows Event Handling System to log events, which can be viewed and cleared using the Windows Event Logger (Start>Control Panel>Administrative Tools>Event Viewer>Protea NE Software).

9.1d Network Menu

[Network>Scan For Devices] - This command looks on the local network (using the broadcast address) for any Ashly network enabled device. Any devices it finds will be added to the network device tree. This scan is done automatically when the software is started. A button of the same name and function is also found beneath the network device tree.

[Network>Network Config] - Adjusts the metering refresh rate, server retries, server timeout, and heartbeat timer.

9.1e Project Menu

[Project>Tab Page>Add, Remove, Rename, and Clear] - Multiple project tabs can be used within the same project to represent different racks, rooms, buildings, etc, and are managed using these four commands.

[Project>Save/Recall Preset To/From All Devices] - This is used to save or recall all device parameters in the current project, based on preset number. When using <Save Preset to All Devices>, a unique preset file is created for each device and saved to the same preset *number* across all devices, overwriting the current preset parameters for that number. When using <Recall Preset From All Devices>, the chosen preset number will be recalled from each device.

9.1f Add Item Menu

[Add Item>Design Mode] - With Design Mode checked On, virtual Ashly devices can be placed on the canvas and configured *before* connecting to the live network devices they will control. This way, a complete system installation can be set up ahead of time in software and saved as a project to be applied later. To apply the prepared project file, use the following steps:

1) Connect all Ashly devices to the network and launch the software, verifying that all devices appear green in the network device tree.

2) Open the project file and link one device at a time by dragging each network device from the device tree onto its virtual device icon represented on the canvas. You will be prompted by the message *<Copy all settings from canvas device to online device?>*, after which all virtual device settings will be applied to the live networked device. A live device icon on the canvas is indicated by a green surrounding box, whereas a virtual device has no green surrounding box.

With Design Mode unchecked, all device icons, control objects, and display objects on the canvas are locked in place.

[Add Item>Control Objects] - Stand-alone control objects can be added to the canvas and linked to control specific device functions. They include Level Fader, Signal LED, Level Meter, Preset Button, Standby Button, Mute Button, Logic Out Button, and Source Select Button.

[Add Item>Display Objects] - Text and image files can be added to the canvas.

9.1g Options Menu

[Options>Auto Add Online Devices] - When this is checked On, all network devices appear on the canvas whenever the software is launched or when the networked is scanned for devices.

[Options>Display Grid] - Turns on or off the project canvas grid

[Options>Auto-Close Preset Recall Messages] - Any device that recalls a preset will trigger a message that appears on the canvas. If this is checked On, those messages will go away automatically, otherwise they will stay on the display until closed by the user.

9.1h Flash Programmer Menu

[Flash Programmer>Launch Flash Programmer] - This is used to update the firmware on any networked Ashly device. All available firmware update files can be downloaded from the Ashly website.

[Flash Programmer >Launch WR-5 Flash Programmer] - WR-5 firmware must be updated through its hosting device, since WR-5 remote controls are not themselves networked. Download the new WR-5 firmware, select the host device, and follow the instructions.

9.1i Load Analysis Menu - Load Analysis is a software tool used to visualize the swept AC impedance of a given loudspeaker, and to test the integrity of a potentially damaged loudspeaker or connection. Load impedance analysis works by formulation of speaker output measurements taken when a user defined swept sine wave input is applied to one amplifier channel by software. Currently, the only Ashly amplifiers with load analysis are NE two-channel (dsp) and nXp.

Loudspeakers are specified with a nominal impedance rating, 8 Ohms for example. This is an average rating, the actual impedance across it's frequency range can vary substantially above or below 8 Ohms due to inductance, resonance, and other properties which affect impedance. Lower impedance, even within a narrow frequency range, can increase the amount of amplifier current delivered to the speaker. This can present a problem when wiring multiple speakers in parallel, as the combined speaker impedance may become so low that it causes the amplifier to go into overcurrent protection mode and shut down. The way to avoid this is to pay attention to the lowest *measured* impedance rather than the nominal impedance rating for a given speaker load, and make sure the amplifier is rated to drive that load.

A second function of load analysis is for troubleshooting loudspeakers. When loudspeakers are damaged by overheated voice coils, torn cones or surrounds, mechanical damage from being dropped, or have corroded connections, they can exhibit different load impedance characteristics than when new. An initial load impedance analysis can be performed when the system is first installed and the results saved to disk for reference. Future load impedance tests can be compared to the original reference data and issue a pass/fail rating based on a user-defined percentage of similarity to the original data. Load anaylsis can thus help determine if loudspeakers are damaged or disconnected, and can be administered from a remote network location.

Keep in mind that this test is a real time audible event, so be certain that all test parameters, particularly volume (sweep level) and frequency range (sweep start/sweep stop), are suited for the speakers under test, and that the venue is ready for a brief period of test tones at potentially significant volume. Note: During the test, all audio DSP processing in the amplifier is stopped.

[Load Analysis>Launch Load Analysis] - This is the working window for performing a load analysis. The user must first select an available networked amplifier from the <Analysis-Capable Amplifier> device tree, then select the output channel to test, then apply the appropriate test settings.

Warning: Do not send low frequency test tones to high frequency drivers or use excessive sweep level, always be certain that the swept frequency range and output level is within the safe operating range of the speaker under test. Remember that all DSP functions are disabled, including crossover filters and limiters. A sweep level setting of 1V will produce a relatively quiet test tone into any speaker, however load impedance characteristics can change at higher volume levels, so test accordingly but carefully. ***Make sure the Sweep Level and Sweep Start Frequency are properly set for this loudspeaker before running the test!*** Click on <Test Amplifier> and a series of tones will be heard through the loudspeaker under test. The test can be immediately cancelled by pressing the same button again. When the test is finished, a plotted curve (yellow) shows load impedance vs. frequency. Click <Set Ref.> to establish this curve as a reference (red) baseline, or save the data to disk for future tests.

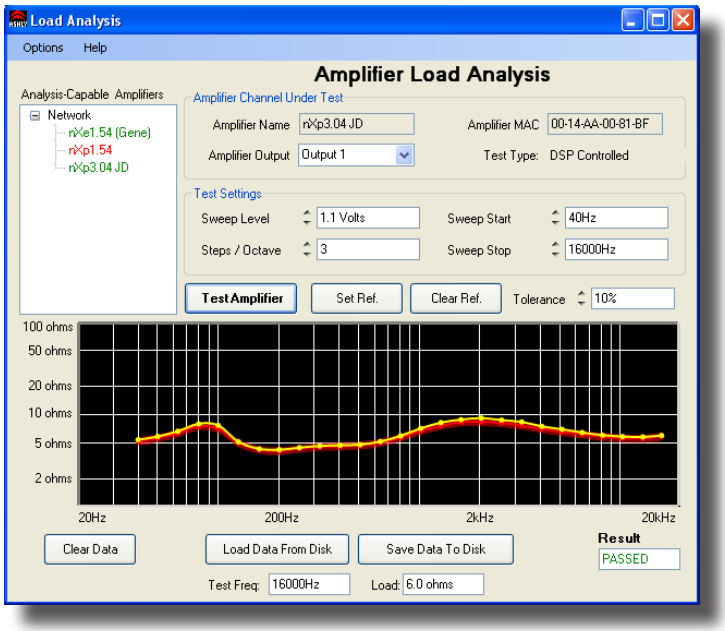

9.1i Load Analysis

Note: Running the load analysis tool when there is no speaker connected to the amplifier is useful for learning about the procedure, but provides no meaningful data.

9.1j Help Menu -

[Help>About Protea^ne Software] - Tells the software version

[Help>Contents and Index] - Online help for device function is found here, along with the ability to search for topics.

[Help>Capture Network Configuration] - While most people will not use this function, it can be helpful when troubleshooting network problems or communicating with Ashly technical support.

9.2 nX Device Options Menu

Double-click on a nX amplifier in the Network tree or on the canvas.

9.2a Flash Reprogram Mode - A nX amplifier can be flash reprogrammed by downloading a new program file (firmware) to the amplifier over the network. Latest firmware updates, if available, can be found on the Ashly website. When the amplifier is put into flash reprogram mode, all audio functions are suspended, the power switch LED flashes, and the COM LED remains lit until flash reprogram is completed. Flash Reprogram only appears in the device options menu when a live device is connected.

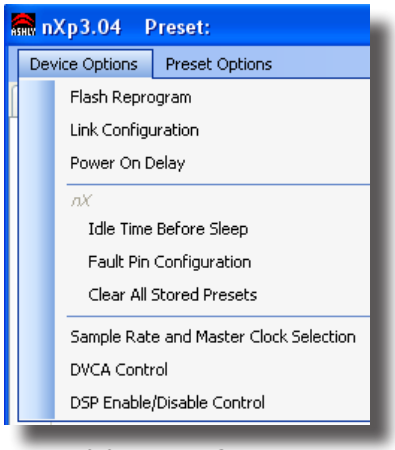

9.2 Device Options

9.2b Link Group Configuration - Link groups allow DSP functions of the same type to track each other across channels within a device. For example, if two separate EQ controls on different channels are linked, any change made to either one of the equalizers will result in an identical change to the other.

nX amplifiers support up to 16 Link Groups, and every DSP tool can be assigned to one of these groups. Once assigned to a group, all similar DSP functions within that group will track parameter changes with each other. More than one type of DSP function block can be assigned to the same group. Each link group can be assigned a name by the user, and can also be assigned a color for easy identification. For further details about linking, see the online help in Protea^ne software.

9.2c Power On Delay - Use this feature to delay the amplifier turning on when first powered up or when waking from sleep. Delay is measured in increments of 100mS, with the limit at 25.5 seconds. The power amplifier should be the last device to power up after other system components have turned on and stabilized. Multiple amplifiers on the same circuit breaker should have staggered Power-On Delays to avoid excessive in-rush current which can trip the breaker.

9.2d Idle Time Before Sleep - On nXe and nXp series amplifiers, the sleep clock timer can be set from 0 to 120 minutes

9.2f Factory Installed Options (not shown) - Factory installed options currently include AES3, CobraNet, or Dante. Options are auto-detected on live amplifiers, but can be added to virtual amplifiers when working in Design Mode.

9.2g Clear All Stored Presets - nXe and nXp only.

9.2h Sample Rate and Master Clock Source Selection: Changes to both of these settings can be made by clicking the <Show Advanced Control> box in this menu item. Sample rate can be set to either 48kHz or 96kHz. Note that at 96kHz, the DSP usage doubles, resulting in half the available processing power for filters, delay, limiting, etc. *Also note that the Feedback Suppressor cannot be used at 96kHz sample rate.* Factory default settings are Auto Selection for clock source and 48kHz sample rate.

9.2i DVCA Control - This feature is used in conjunction with the DSP tab gain tool called <Gain w/VCA>. Use this feature to create up to four gain subgroups as you would on a mixing console. Any input or output channel can be added to one or more VCA subgroups for group gain control. While no external hardware control is allowed for this subgroup, a level fader control object can be added to the project canvas and linked to this named VCA level control.

9.2j DSP Enable/Disable - This removes from operation the input, output, or matrix mixer DSP functions on any channel. When removed, audio is passed directly through the stage that has been disabled.

9.3 nX Preset Options Menu

The Preset Options menu in the main device window allows user-defined setups to be named, saved to, and recalled from the amplifier or a networked computer. Several other utility functions are available as well. Presets are a snapshot of all current settings on a given amplifier.

nX amplifiers can store up to 31 internal presets, each preset storing control data for all channels and audio functions. Preset names must be 20 characters or less. Changes to an individual preset can be saved to the amplifier using <Save Preset To "nX***">, or saved to the PC using <Save PresetTo Disk>. Individual preset files use the extension (*.pne).

9.3a Sub Presets: Instead of saving or recalling an entire preset affecting all device functions, a sub-preset affecting only a user defined sub-set of DSP functions can be created. To create a sub-preset, first check the box labeled <Selected for Sub-Presets> in all DSP control blocks to be associated with this sub preset, then under the preset options menu click <Save Sub Preset to Disk> or <Save Sub Preset to "nX***">.

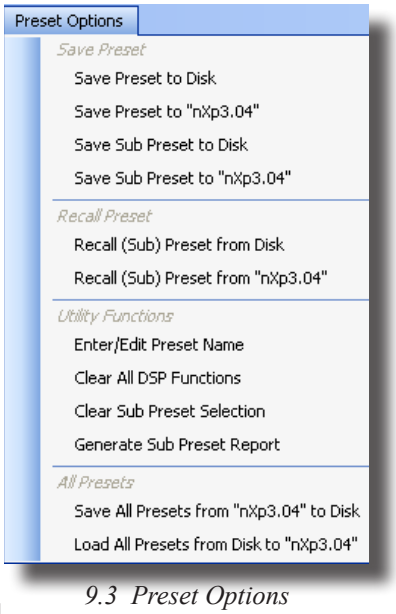

9.3 Preset Options

A preset or sub preset can be loaded to the amplifier by one of the following methods:

1) Use Protea^{ne} software on a PC connected to the network to recall files saved on either the PC or on the amplifier.

2) Use contact closures to load presets 1-4 from memory by wiring switches to the rear panel contact closure connector.

3) Use an Ashly WR-5 or neWR-5 remote control.

4) Use the event scheduler.

Note: A full preset recall event will overwrite any unsaved changes, so be sure the current configuration is saved before continuing or any changes will be lost. The amplifier always loads the last working settings on power-up, to preserve any changes should the power be inadvertently turned off prior to saving a preset. *Caution: A new preset may have dramatically different settings capable of damaging sound system components, so be careful not to recall the wrong preset while the system is on.*

9.4 Device Control Tabs

The following device control tabs are available for nXe and nXp models.

nXe series amplifiers include Control Surface, Security, Network Properties, Event Scheduler, and Fault Log, plus optional Cobranet if installed.

nXp series amplifiers add DSP, Input Source, Meters, Meter Dynamics, Meters AutoLeveler, and CobraNet if installed.

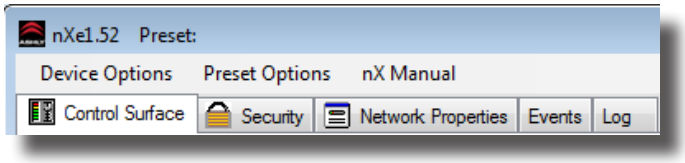

nXe Series Control Tabs

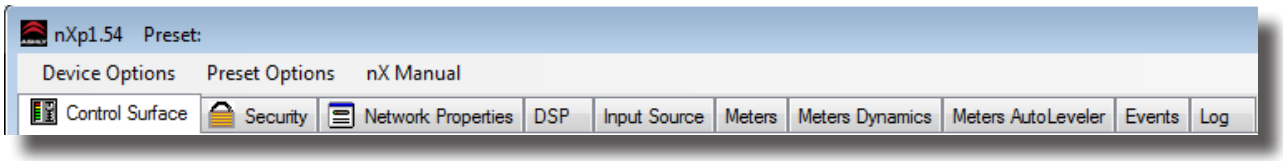

nXp Series Control Tabs

9.4a Software Control Surface - Global

The control surface is the main user interface for the amplifier section. DSP functions, if available, are managed from the DSP tab. The following amplifier functions are available in the control panel:

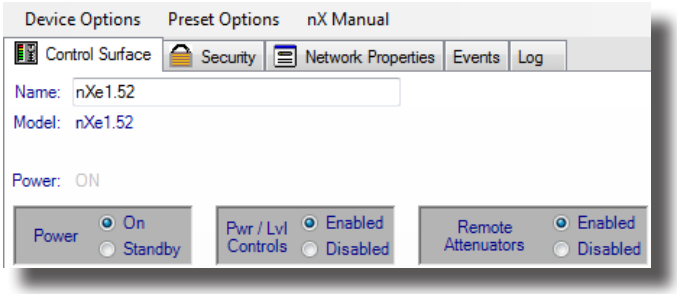

9.4a - Control Surface Global Functions

Name - The user defined name for this specific amplifier. Up to 20 characters can be used.

Model - The model of amplifier being addressed

Power - Shows power status as On, Off, or Standby.

Power On/Standby - This shows power status and allows the user to set power to standby from software. Standby can also be controlled by a rear panel contact closure or by the event scheduler. The front panel power switch blinks when in standby.

Power/Level Control Enable/Disable - This disables both the front panel power switch *and* all level controls, fixing the value of all level controls at maximum (fully on) regardless of their position. Note that the software attenuators shown on the control surface will always reflect the physical position of the amplifier's front panel attenuators, even when they are disabled and not attenuating the signal.

Remote Attenuator Enable/Disable - Disables all "Remote DC Level Control" Euroblock connectors on back panel

Internal Amplifier Ambient - This indicates the internal ambient temperature of the amplifier.

DIP Switch Settings - Every amplifier channel has a six position rear-panel DIP switch for setting HPF, Limiter, Gain, and Output Mode. The HPF status is unavailable to software and is not displayed. Current DIP switch positions for Limiter, Gain, and Mode are always shown on the main software control surface.

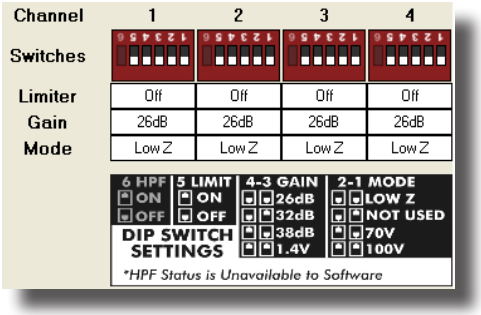

9.4a - Control Surface DIP Switch Settings

9.4a (continued) Software Control Surface - Channel

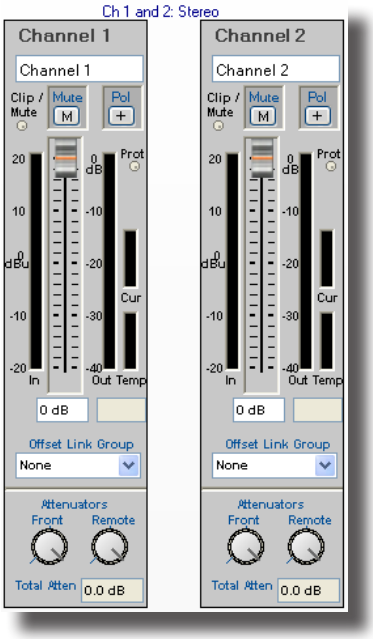

9.4a - Control Surface Channel Functions

Stereo/Bridged Status - This shows if a channel pair is in stereo or bridge mode as set by back panel switch. In bridge mode, input signal is automatically taken from the odd channel input and inverted, then sent to the even channel. The even channel controls become disabled. Note that in bridge mode, the even channel software attenuators will still reflect the physical position of the amplifier's front panel attenuators, even though they are removed from control of bridged signal.

Channel Name - This user defined text box names the amplifier output channel. Up to 20 characters can be used.

Clip/Mute LED - This LED shows when the amplifier output is either muted or clipping. Clipping is indicated when the output level is 1dB below the output power supply rails, and accurately tracks AC line voltage sags. This LED shows the same status as the front panel clip/mute LED.

Mute Button - This button mutes the output channel. Output mute can also be controlled by the event scheduler, WR-5, or neWR-5 remotes.

Polarity Button (Pol) - This button inverts the polarity of the output channel signal.

Input Meter - This meter indicates the pre-fader amplifier input level in dBu.

Main Output Channel Fader - This controls the output attenuation. Output attenuation below -40dB mutes the output.

Output Meter - This indicates the amplifier output level in dB below full rated output.

Protect Indicator (Prot) - These indicate an overtemperature, overpower, or overvoltage fault on individual channels.

Current Meter (Cur) - The Current LED shows that the amplifier is delivering current to a load, and is useful to determine if a speaker load is open or shorted.

Temperature Meter (Temp) - The temperature meter and text box shows the current operating temperature of the output devices for each channel. Excess of 100°C will trigger overtemperature protection.

Offset Link Group and Offset Faders - A group of output channels can be linked together to attenuate the group as a whole without changing the relative levels of each channel. If a channel is assigned to one of the 16 offset link groups, a colored triangle marker appears on the left side of the main fader graticule for secondary level control of all channels in that group. Left click and drag this marker up or down to adjust the link group level. The actual main output channel faders can not be linked to a group. Note that more than 40dB of cumulative channel attenuation causes the channel to mute.

In addition to the control surface offset link group attenuator control (not the main fader), most DSP functions have a link group check box in their work window to assign a specific DSP parameter to one of 16 link groups if desired. Link groups can be renamed by clicking on any group name and entering the new name.

Attenuators - These two dials indicate the physical position of hardware level controls on either the amp front panel or the remote DC level control. Note that these will display the position of attenuators even when they are disabled.

Total Attenuation - This indicates the total amount of attenuation being applied to the channel. It is the sum of the following attenuation points: control surface fader, offset link group attenuation, front panel level control, and remote attenuator.

Note: The maximum dynamic range of the amplifier is achieved when the amplifier's attenuation is set to the optimal value. The amplifier's front panel attenuators follow the DSP section but precede the power amplifier section (see block diagram). Thus, the optimal setting for maximum dynamic range is determined by subtracting the amplifier's input sensitivity from the maximum input signal of +20dBu. For example, when the back panel Gain DIP Switch is set for gain of 1.4V, the input sensitivity is +5.1dBu (1.4Vrms = +5.1dBu). Subtract +5.1dBu from +20dBu, and that results in 14.9dB attenuation required for optimal dynamic range. For other input sensitivity values, see the specifications section.

9.4b Security Tab

Ashly nXe and nXp amplifiers have multi-user/multi-level security capability. When security levels are defined, a person must have a User Name, Password, and sufficient access level to make changes. Seven different users are supported; a Default user, an Admin user, and five additional custom named users. All security information is stored in the amplifier, not in presets. Passwords are case sensitive.

The Security tab has three sections, the [Current User] section that shows the currently logged in user and their access level, the [Log-In] section where a person logs in as Default, Admin, or custom user name, and the[Device Users] section where new user names and passwords are entered and where access levels are assigned for each user name.

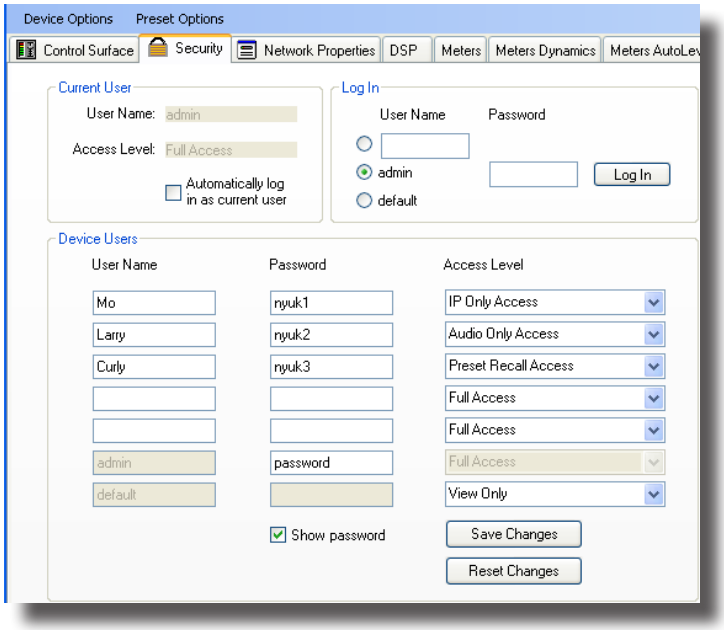

9.4a - Security Tab

Default - The Default user is the base level of access, cannot be renamed, and never requires a password. The factory setting for the Default user is to allow full access. Anyone can log in as the Default user, so it's user access level should be set low, typically View Only, once security settings have been implemented. To log in as Default user, click the [Default] checkbox in the Log In section and then click the Log In button.

Admin - The Admin user is for the highest administrative person, cannot be renamed, and always has full access. Any changes to the Admin password are made in the Device Users section and must be saved by clicking on the [Save Changes] button. To log in as Admin in the Log In section, click the [Admin] checkbox, enter the password if one is assigned, and click the Log In button. Only the Admin, or anyone else with full access, has the right to show passwords, save changes, reset changes, or edit user names, passwords, and access levels. A factory reset will erase all user names and passwords in the amplifier.

Other User Names - Up to five custom User Names can be entered in the Device Users section along with passwords and access levels.

Access Levels - On amplifiers without DSP, access levels are View Only, Audio Only, IP Only, and Full Access. With DSP, additional access levels include Audio Parameter Access, Preset Recall Access, DSP Input Channel Access, and DSP Output Channel Access.

9.4c Network Properties Tab

In this tab, device information includes device type, MAC address, and network connect status. Device network configuration can be set to automatic DHCP (recommended) or Manual Static IP. Advanced Network Configuration allows the user to bypass corporate firewalls and assign a specific port for remote setup and monitoring.

The user can visually identify the amplifier on a network by clicking the "Identify Device" button, which lights the COM LED on the amplifier's front panel for two seconds. The amplifier's firmware revision is shown in the hardware configuration section as well. From time to time Ashly may post updated firmware on our website which can be downloaded and then flash reprogrammed to the amplifier. Flash reprogram is found in the device options menu when connected to a live amplifier.

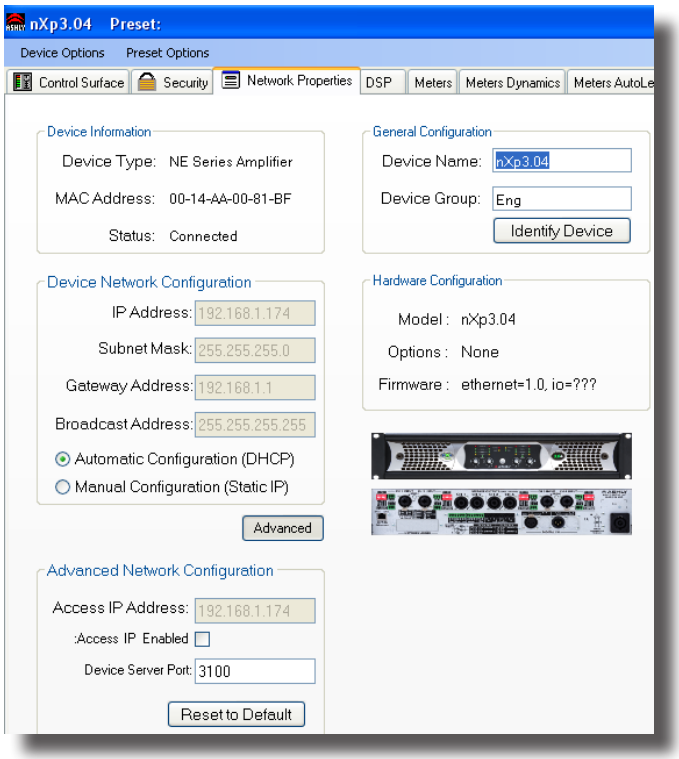

9.4c - Network Properties Tab

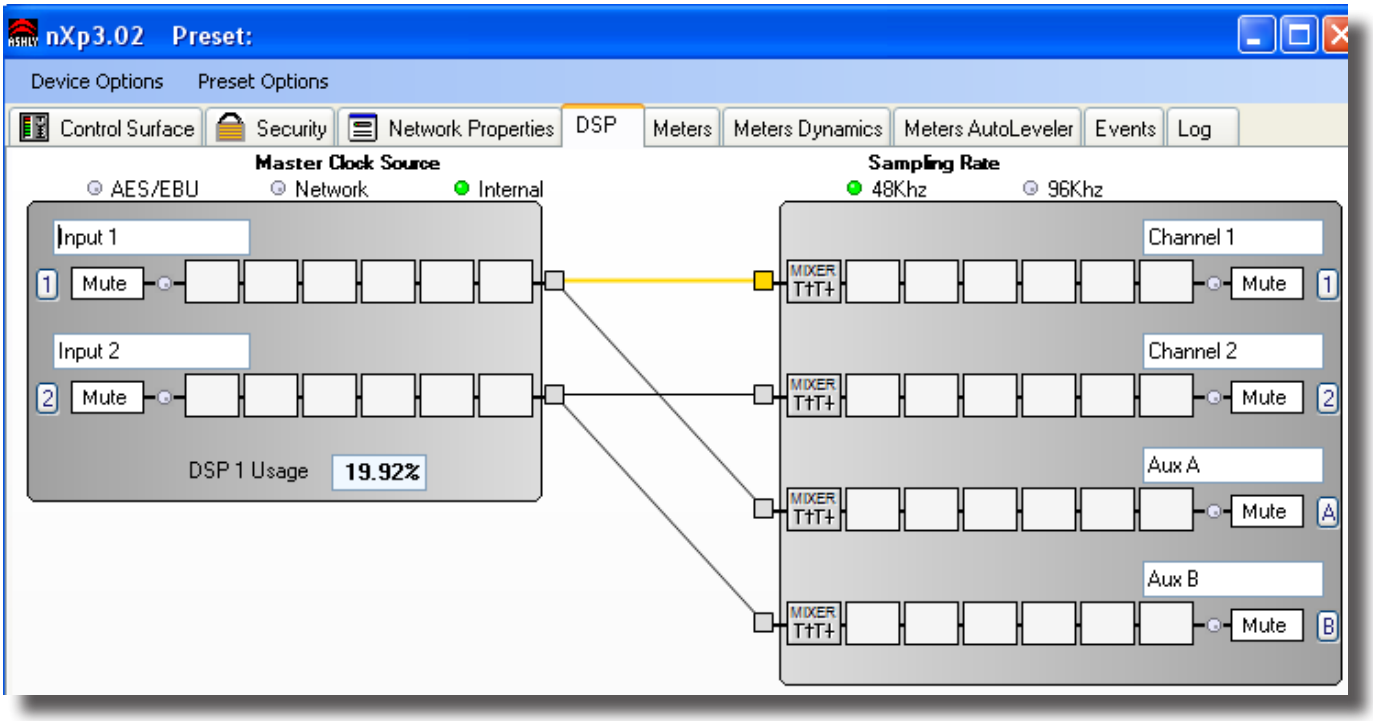

9.4d DSP Control Tab

All signal processing is done in the DSP control tab, with separate input and output sections and a cross-linking matrix mixer between. From left to right, each channel in the DSP tab includes the following features:

Input/Output Channel Number - Click on this to use each channel's Clear, Copy/Paste, Link, and Sub Preset functions.

Input/Output Channel Name - The user can name each input or output channel.

Input/Output Mute Button - Mutes the input or output. *Note that only the output mute lights the front panel Mute LED.*

Input/Output LED - Shows signal present or clipping for that DSP input or output channel.

Pluggable DSP Blocks - Six pluggable DSP blocks are available for each input and output. To use, right-click on an empty DSP block to select one DSP function from the drop-down list. Left-click on the placed DSP function to adjust it's parameters, or right-click on it to Bypass, Select for Sub-Preset, Copy/Paste to another similar block, or Delete. Total DSP usage is indicated as a percentage at the bottom of each input section in the DSP tab. Increasing the number and complexity of applied DSP tools increases the DSP usage. Total DSP usage cannot exceed 100%. All DSP functions are listed below, with details on the following pages.

1) Dynamics controls - Brick Wall Limiter, Compressor, Autoleveler, Ducker, and Noise Gate. Ambient Noise Compensation is available on outputs only.

2) Gain functions - Gain, Gain with VCA, RD-8C Remote Control Gain, neWR-5 Remote Control Gain

3) Equalization - 31 Band Graphic EQ, 10/6/4/2-Band Parametric EQ, Feedback Suppressor (input), FIR filter (output)

4) Crossover functions - Four-Way, Three-Way, and Two-Way Crossovers are available on outputs only. HPF and LPF filters are available on both inputs and outputs.

5) Delay - At 48kHz, Maximum Speaker Delay is 21mS, and maximum Delay is 682mS. At 96kHz, they are 10mS and 341ms respectively.

6) Metering - -60dBu to +20dBu display

7) Signal Generator - Pink noise, White Noise, Sine Wave

Pluggable DSP Block Descriptions

1) Dynamics Controls

Clip (Brick Wall) Limiter

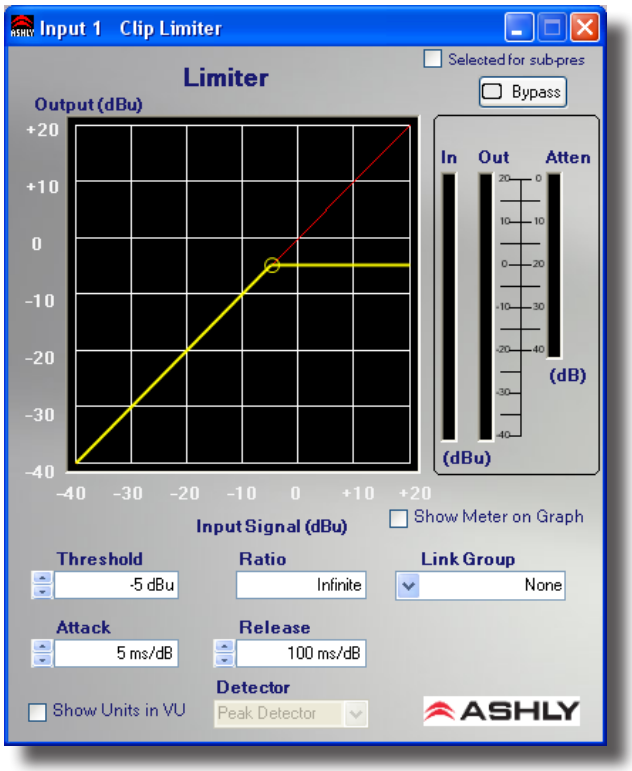

The Clip Limiter is a compressor with fixed ratio (infinite). It allows for user-adjustable threshold, attack time and release time. It also allows for assignment to a Link Group to link the parameters of this block with limiters on other channels. For a full-featured compressor/limiter, refer to the Compressor.

Parameters:

Threshold - The signal level at which the Limiter begins to attenuate the signal. (+20 to -20 dBu).

Ratio - The amount of attenuation to the signal above the threshold point. Fixed at infinite, meaning no signal beyond this level.

Attack Time - The rate (in ms/dB) at which the Limiter attenuates the input signal, once the signal reaches threshold.

Release Time - The rate (in ms/dB) at which the attenuation will return to normal, once the signal falls below threshold.

Link Group - Group to which all parameters are assigned, for simultaneous adjustment to multiple Limiters

Show Meter On Graph - Overlays the input/output level meters on the Limiter graphical display.

Detector - Fixed at Peak.

Compressor

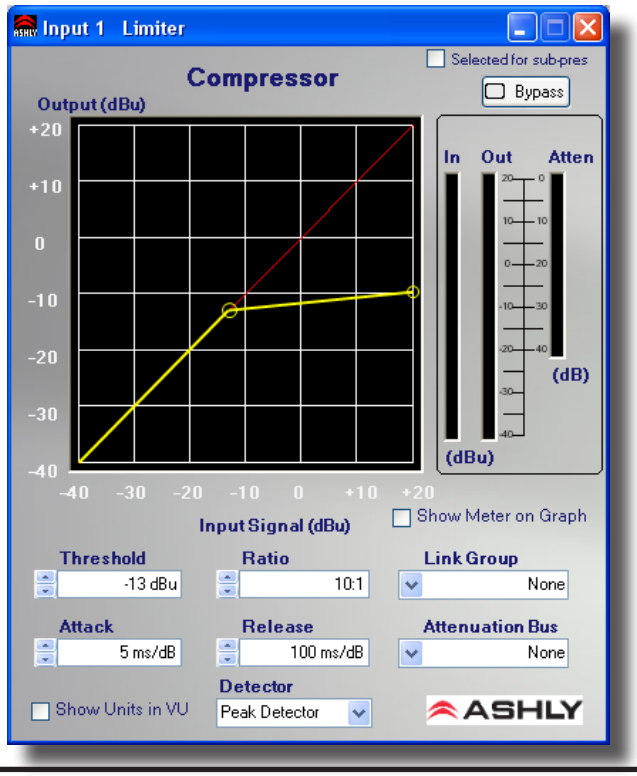

The Compressor function is a full featured Compressor/Limiter. It allows for user-adjustable Threshold, Ratio, Attack Time, Release Time and Detector type. The Compressor also allows for assignment to a Link Group to facilitate adjustment of multiple Compressor/Limiters simultaneously. A separate Attenuation Bus assignment is provided to allow multiple limiters to force their gain reductions to track each other, ie stereo signals. For simple peak limiting, the Brick Wall Limiter can also be used.

Parameters:

Threshold - The signal level at which the Compressor begins to attenuate the signal. (+20 to -20 dBu).

Ratio - The amount of attenuation to the signal above the Threshold point. Range is 1.2:1 to infinite.

Attack Time - The rate (in ms/dB) at which the Compressor attenuates the input signal, once the signal reaches Threshold.

Release Time - The rate (in ms/dB) at which the Compressor attenuation will return to normal, once the signal falls below Threshold.

Link Group - Group to which all parameters are assigned, to facilitate simultaneous adjustment to multiple Compressors in the system.

Attenuation Bus: All Compressors assigned to the same Attenuation Bus will apply the largest amount of attenuation on any of the assigned Compressors. This can be used to facilitate "stereo" (or similar) operation of multiple Compressors.

Show Meter On Graph - Overlays the Input/Output level meters on the graphical display.

Detector - Selects between PEAK and AVERAGE operation of the Detector (see below).

Peak Detector - Setting the detector to Peak means that the peak level of a signal is used to trigger the Compressor. In Peak detect mode, Attack and Release times are both adjustable

Average Detector - Setting the detector to Average means that the average level of a signal is used to trigger the Compressor. Instead of separate Attack and Release controls, the Average Rate controls the speed at which the compressor functions.

Autoleveler

The Auto Leveler is a dynamics processor used to automatically boost or cut a signal to a user-defined target level. The Target Level is the primary setting in the Autoleveler, as it determines the constant level to which an input is boost or cut. The Autoleveler can be used in situations such as speech re-enforcement, where an unknown source level needs to be maintained at a specific output level. For example, a podium microphone where different speakers will be presenting may have an auto-leveler applied to ensure that strong or soft speakers' voices are amplified appropriately. The controls for the auto leveler are split into two categories, Basic and Advanced. It is recommended you start with the basic controls, and if fine tuning is required, use the advanced controls. Warning: Depending on the settings, it is possible to apply up to 27dB of gain with the auto leveler.

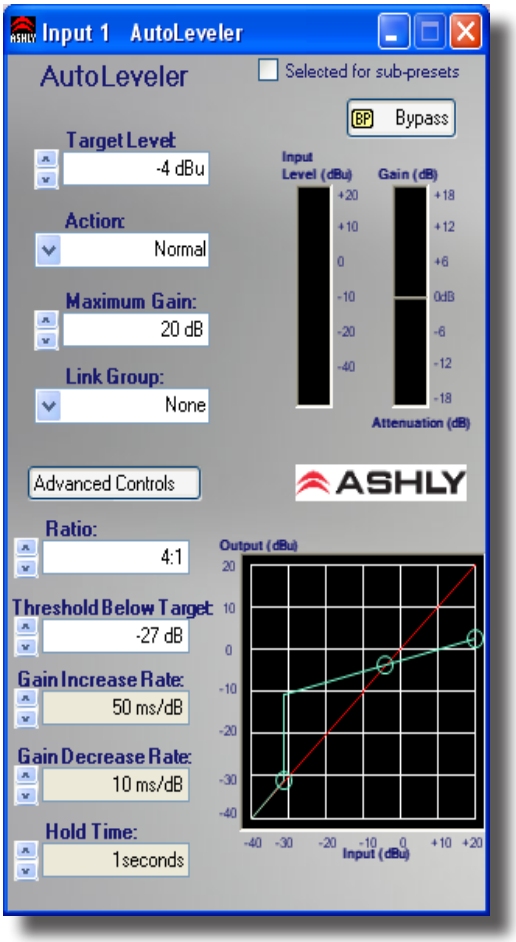

Basic Parameters:

Target Level - The desired continuous output level of the signal.

Action - Sets the Ratio, Hold Time, and Gain Change Rates (see below for definitions). These settings are general starting points for how the auto leveler should behave. Action can also be user defined under Advanced Controls, with three drag points available for a more visual adjustment.

Action	Ratio	Hold Time	Gain Increase	Gain Decrease
Aggressive	10:1	0 Seconds	20 ms/dB	5 ms/dB
Normal	4:1	1 Second	50 ms/dB	10 ms/dB
Gentle	2:1	2 Seconds	100 ms/dB	20 ms/dB

Maximum Gain - This is the total amount of gain the auto leveler may apply before it stops affecting the signal. Maximum Gain controls the Threshold Below Target using the following formula:

$$\textit{Threshold Below Target} = \textit{Max Gain} \div ((1 \div \textit{ratio}) - 1)$$

Advanced Parameters: (see image on previous page)

Threshold Below Target - Determines the relative input signal level above which the Autoleveler increases gain, below which no action is taken.

Ratio - This is the ratio of the input level change in dB to output level change in dB. It determines the degree of boost or cut applied to a signal to maintain the target level. The higher the ratio, the closer the signal (above threshold) will approach the target level. However, a higher level will also increase how aggressive the Autoleveler will maintain that gain.

Gain Change Rate - Prevents sudden, choppy-sounding level changes to an input signal having a wide dynamic range.

Hold Time - This is the time after the input signal falls below the threshold during which the Autoleveler's gain is held constant before it returns to unity gain. Hold Time is used in conjunction with gain change rate to arrive at a natural-sounding auto leveler action.

Both the Advanced and Basic control views have a visible meter bar. It shows the gain or attenuation applied by the auto leveler in 1 dB steps.

Ducker

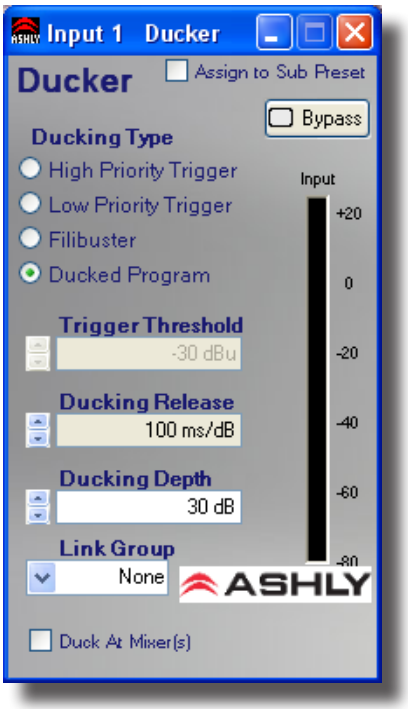

The Ducker is used to attenuate the level of selected channels when one or more "Trigger" channels has signal preset. This is typically used in paging applications where a common input signal such as background music needs to be attenuated when signal is applied to a specific channel (e.g., a paging microphone).

Parameters

Ducker Type - Available types are High and Low Priority Trigger, Filibuster, and Ducked Program.

Trigger Threshold - The signal level on a trigger channel at which point all ducked program channels are attenuated.

Ducking Release - This determines the time the ducked program stays attenuated after the trigger input signal has fallen below its threshold.

Ducking Depth - Determines how much attenuation is applied to input channels set for ducked mode.

Duck At Mixer(s) - Disables any attenuation being applied to the input and enables the ability for each output channel's matrix mixer to apply the attenuation.

Ducker Types

High Priority Trigger - When signal is present on this channel, all channels set to "Ducked Program", "Low Priority Trigger" and "Filibuster", attenuated to -Inf. (Muted).

Low Priority Trigger - When signal is present on this channel, all channels set to "Ducked Program" will be attenuated by the depth specified on that channel. All channels also set to filibuster will be attenuated to -Inf. (Mute).

Filibuster - When signal is present on this channel, all channels set to "Ducked Program" will be attenuated by the depth specified on that channel. All channels also set to Filibuster are attenuated to -Inf. Only one Filibuster channel is allowed to be above the threshold at any given time, the rest are fully attenuated. The filibuster input does not allow other signals to return to normal until half a second after it has fallen below its threshold.

Ducked Program - Sufficient signal present on any Trigger Channel will cause this channel to be attenuated by the specified depth.

Ducking At Mixer(s)

This feature is particularly useful when setting up multiple zones where only some of the output channels should be ducked (e.g. restaurants, courtrooms, etc.). When this feature is selected, each Matrix Mixer is allowed to enable or disable the Ducking on that particular output.

Noise Gate

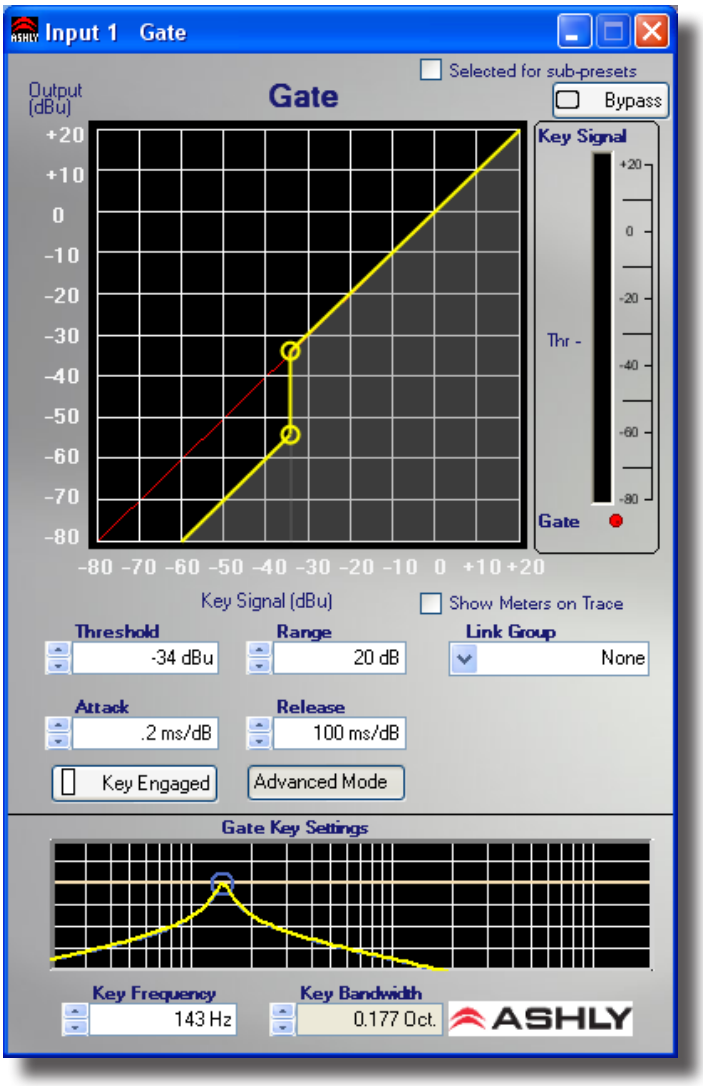

A Noise Gate can be used to minimize unwanted, low level signals from an individual input. Threshold is the level above which an input signal will pass through, below which its signal is attenuated by the Range value. Attack and Release control the time characteristics of the gating action. Attack sets the amount of time used to ramp the gain to unity. Release sets the time required to attenuate the signal. The Gate may be assigned to a Link Group to link its parameters with other Gates.

Parameters:

Threshold - The minimum signal level required to "open" the gate and allow signal to pass through, available as text box or as the top drag node on the graph.

Range - The amount of attenuation applied to the unwanted signal when it remains below Threshold, sometimes referred to as "floor". It is available as text box or as the bottom drag node on the graph.

Attack - The rate at which the gate rises to unity gain after the signal has reached Threshold.

Release - The rate at which the gate applies attenuation to the signal after it falls below Threshold.

Advanced Mode Parameters:

Advanced Mode allows the user to specify a Key filter for the gate. The key filter does not EQ the signal passing though the gate, but rather allows the gate *threshold* to respond only to a frequency band within the signal as determined by the filter. The Key filter is a band-pass filter with selectable center frequency and bandwidth. The Key filter is only engaged when the Key Engaged button is clicked.

Key Frequency - This is the center frequency of the key filter, use text box or drag the frequency node left or right.

Key Bandwidth - This is the bandwidth of the key filter, use the text box or *right-click*-drag the node left or right..

Ambient Noise Compensation (output channels only)

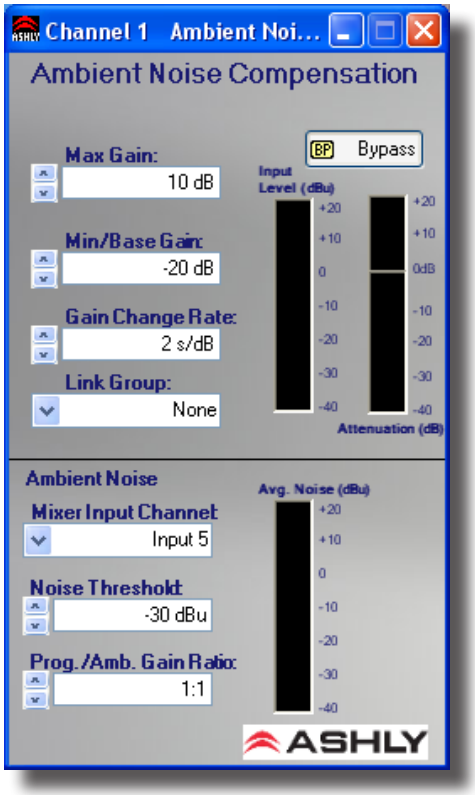

Ambient Noise Compensation (ANC) is an automatic output level control that uses a microphone to monitor background noise in a specific zone, then adjusts the output level to that zone accordingly in order to maximize intelligibility. One amplifier input channel must be dedicated to the sensing microphone and cannot be used for other inputs.

nX amplifiers do not have mic preamps, so an external mic preamp is required. The mic preamp output is then connected into any input on the nX amplifier other than the program audio channel in which the ANC function is engaged on. The ambient noise signal is then processed similar to a slow-responding SPL meter which is then used as the control signal for the automatic level control of the program audio/paging signal.

The ambient noise sensing microphone doesn't need to be a high-quality microphone because it is only used to pick-up the overall noise level in the room and is not used for the direct program audio or paging. The placement location of this noise-sensing microphone is very important for the ambient noise compensation function to work well. A unidirectional microphone pointed toward the noise sources and away from the sound system speakers works best.

ANC Meters and Controls

Input Level Meter - The input level of the program audio before ANC gain/attenuation is applied.

Attenuation Meter - The gain/attenuation automatically applied to the program audio by the ANC function.

Max Gain - Sets the maximum gain that you allow the ANC to apply to the program audio. A typical starting value is 10 dB.

Min/Base Gain - Sets the minimum gain that you allow the ANC to apply to the program audio. A typical starting value is -20 dB. This also sets the starting gain value once the noise exceeds the threshold. The minimum gain is +1dB.

Gain Change Rate - The rate at which the ANC will change the gain as measured in seconds per dB. A typical starting value is 2 seconds/dB.

Link Group - The channel group assignment for linking multiple channels parameters. Use this feature to link stereo program audio channels to track each other in gain changes in response to ambient noise change.

Average Noise Meter - The level of the ambient noise signal at the point where it enters the matrix mixer and the ANC function.

Mixer Input Channel - The input channel selected for the ambient noise sensing microphone. The microphone signal is taken at the point where it enters the matrix mixer, after any input signal path processing.

Noise Threshold - The noise-sensing signal level above which you desire the ANC to start to increase the program audio gain above the Min Gain. A typical starting value is -30 dBFS. Keep in mind that any changes to the gain of the noise-sensing microphone will affect the setting of the Noise Threshold control.

Program/Ambient Gain Ratio - The ratio of dB increase in program level for every 1 dB increase in ambient noise level. A typical starting value is 1.0 which means that for every 1 dB increase in ambient noise, the ANC will automatically increase the gain of the program audio by 1 dB.

ANC Setup Procedure

1) In the control software, assign the ANC function to the channel to be used for background music or voice paging (program audio). Set the ANC controls to the "typical" settings described above, which is also the default settings of a new ANC function when it is first placed in the signal processing block.

2) Open the ANC control window and select the noise-sensing microphone input channel in the drop-down box labeled Mixer Input Channel.

3) Physically locate the noise-sensing microphone in the room by pointing it toward the noise sources such as groups of people talking, HVAC equipment etc., yet pointed away from the sound system speakers.

4) Add microphone preamp gain (external preamp) and level control functions (software) on the noise-sensing microphone signal path before the matrix mixer and adjust the microphone gain so that you can see the ambient noise input level meter start to show a level when the room noise starts to increase. To adjust the ANC controls for good-sounding operation without people present, a pink noise source or even a boom box can be used placed near the expected noise location to simulate the expected noise.

5) Adjust the ANC's Noise Threshold control to the ambient noise input level at which you would like the program audio gain to start to increase. Increase the room noise source so that you see the ambient noise input level meter rise above your Noise Threshold setting. You should see the Program Audio Gain meter slowly rise above the Min Gain setting.

6) Slowly increase the noise source and adjust the Program/Ambient Gain Ratio for the desired amount of noise compensation.

7) Continue to increase the noise source to the highest level you would expect. Adjust the Max Gain to a level which limits the maximum gain which the ANC applies to the program audio so that it will not become too loud or clip.

8) The Gain Change Rate can be adjusted according to how fast you would like the gain changes to take place in response to changes in ambient noise.

9) Be aware that an improperly setup ANC can result in runaway gain where the program audio is picked-up by the noise-sensing microphone as background noise. The result is not necessarily feedback squeals, but the gain of the program audio could ramp up to the Max Gain value even with no ambient room noise. Usually the best remedy for this problem is to locate the noise-sensing microphone closer to the expected noise sources and further away from the sound system speakers. Sometimes a baffle may be helpful, located between the speaker and microphone to block direct sound pickup. Also, the ANC Program/Ambient Gain Ratio can be lowered to reduce the susceptibility to gain runaway.

2) Gain Functions

Gain

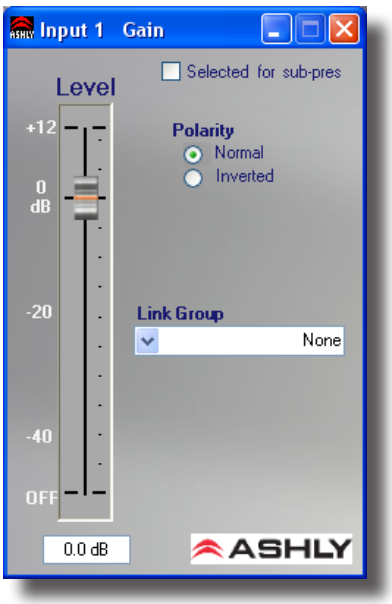

The Gain block allows the user to modify a signal's level by either applying gain or attenuation. The Polarity of the signal may also be inverted. The Level control allows for gain adjustment between +12db and -50dB and OFF. The LEVEL fader can be adjusted in 0.5dB increments. Finer adjustment (0.1 dB increments) may be made by typing in the value into the provided text box below the fader.

The Gain block may be Linked with any other Gain block via Protea^{ne} Software. This will force all parameters (level and polarity) to be the same across the Linked blocks. Note that changes to a Linked Gain block do not affect a VCA Gain block.

For a more powerful linking of gains consider using the Gain with VCA block.

Parameters

Level - Off, -50dB to +12dB in 0.1dB increments

Polarity - Normal or Inverted.

Gain with VCA

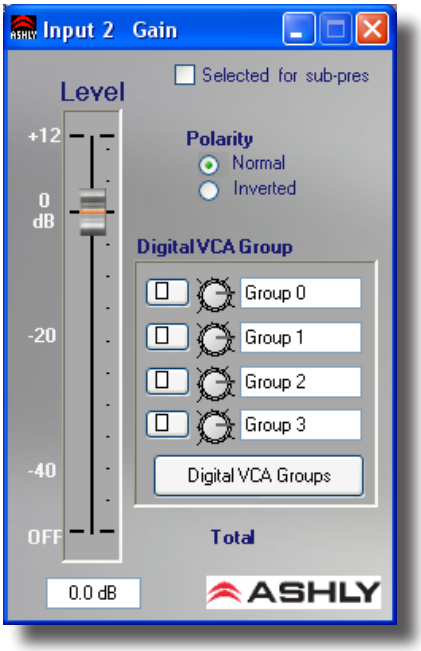

The Gain w/ VCA block allows the user to modify a signal's level by either applying gain or attenuation. The Polarity of the signal may also be inverted. The Level control allows for gain adjustment between +12db and -50dB as well as OFF. The Level fader can be adjusted in 0.5 dB increments. Finer adjustment (0.1 dB increments) may be made by typing in the value into the provided text box below the fader.

Additionally, the Gain can be assigned to a subgroup using the Digital VCA Group. This allows a single "Master" fader to adjust multiple gains. Note that unlike using Linking, the Digital VCA Group does not change the position of the Level fader. Rather, the "virtual" fader is created by the Digital VCA Group. As the Digital VCA Group "Master" fader is moved, the amount of gain/attenuation is added to the Level shown on the Gain w/ VCA fader. This works in a similar fashion to a "VCA Subgroup" on a mixing console. Note that a single Gain w/ VCA block can be assigned to up to 4 Digital VCA Groups, thereby allowing more complex configurations.

Parameters

Level - Off, -50dB to +12dB in .1dB increments.

Polarity - Normal or Inverted.

Digital VCA Group Enabled - Selecting this button enables each corresponding Digital VCA Group.

Digital VCA Groups - Selecting this will open the VCA Groups Master Faders window.

Total - This indicator shows the total gain/attenuation applied to the channel. It is the sum of the gain of the Level fader plus the gain applied by each of the enabled VCA Groups.

RD-8C Remote Control Gain

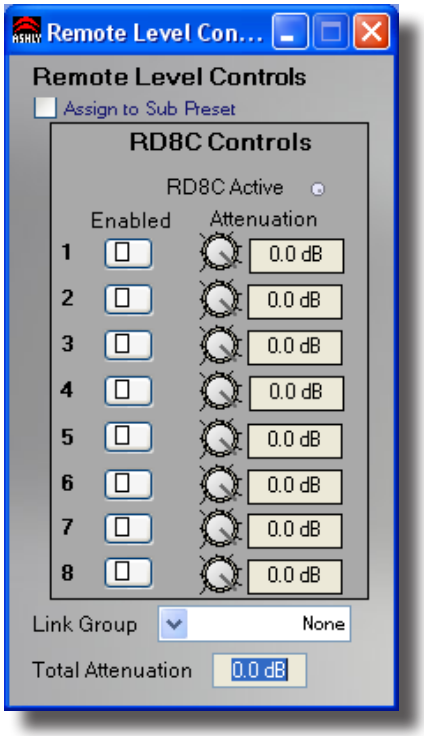

Remote Gain allows the user to choose where Ashly's RD-8C will apply gain to a signal path (WR5s are handled by the WR5 Gain Block). When the remote is assigned to a channel, it applies gain/attenuation within the remote gain block, allowing the other gain blocks to remain unaffected by the remotes. This allows for more complex setups, i.e. the system has a specified maximum gain/attenuation (when the remotes are all set to 0), but may not be the maximum for the unit.

RD8C Controls

The RD8C Controls allows the user to see the current status of the RD8C, and assign faders to a channel. Any fader may be arbitrarily assigned to any DSP channel or multiple DSP channels. When "Enabled" is checked (Green) for a particular RD8C Fader, then that fader's attenuation is applied via the remote gain block. The current attenuation for each fader is also displayed for ease of setup and knowledge of how a fader will affect the channel. The RD8C Active LED is also available. This indicates whether or not a RD8C has been or is being used with this device.

Total Attenuation - The total attenuation is displayed. This is the total amount of attenuation applied by the remote gain block.

Link Group - It is possible to link the remote gain block to other remote gain blocks. When these remote gain blocks are linked, their WR5 attenuation and RD8C assignments will track. This allows for room-combining where the WR5's gains should track each other.

WR-5, neWR-5 Remote Control Gain

The WR5/neWR5 Gain block is the DSP block where channel gain adjustments are made via the WR5 or ne-WR5 remote. This block is nearly identical to the standard gain block except that it is also controllable via the WR5 or ne-WR5 remote and does not have polarity inversion. This block may be linked for room-combining situations.

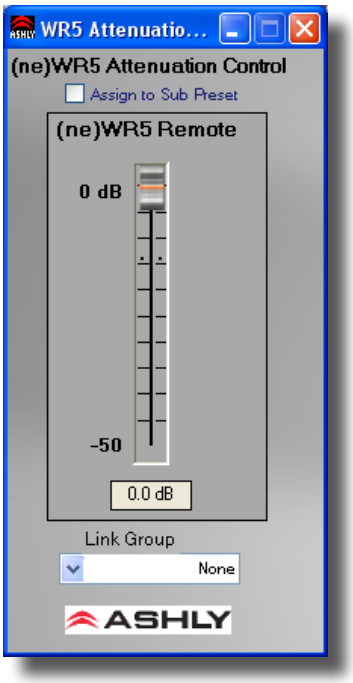

3) Equalization

Graphic Equalizer

The graphic equalizer offers 31 standard ISO center frequency controls with Constant Q or Proportional Q filters, as well as adjustable filter bandwidth. The Flatten button returns all filters to nominal. Individual filters can be returned to nominal by pressing <Ctrl + Click> on the fader knob. A course EQ curve can be drawn quickly by left-clicking and dragging across the EQ frequency response display. Multiple graphic equalizers may be assigned to a Link Group so that their controls will track.

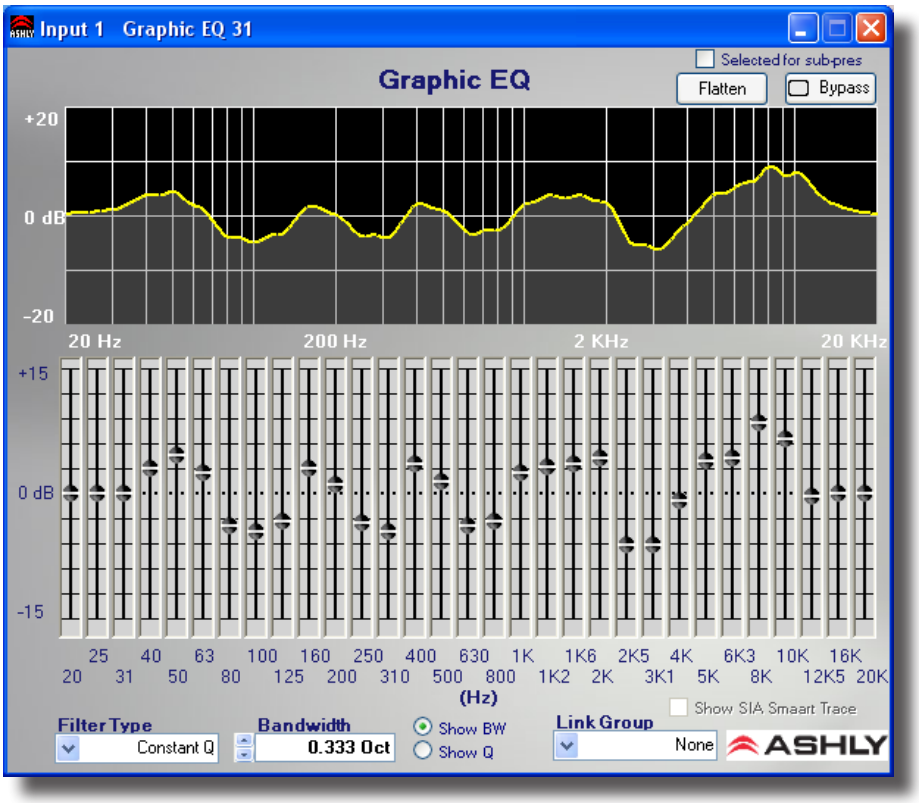

Parameters

Filter Type - This selects Proportional Q or Constant Q (default) filters. Constant Q filters have consistent Q/Bandwidth regardless of the amount of boost or cut. Proportional Q filters get narrower with increasing boost/cut. Differences in filter shapes can be observed on the frequency response display.

Bandwidth - This sets the Bandwidth of the filters, from 1/4 octave to 1/2 octave (before Proportional Adjustment). The default bandwidth is 1/3 octave.

Link Group - Link Group to which this block is assigned, useful for stereo signals.

Faders - Graphic representation of 31 filter amplitude controls.

Parametric Equalizers (10, 6, 4, or 2 band PEQ)

The Parametric Equalizer (PEQ) provides several types of filters to tailor the signal response with high precision. Four sizes are provided, with 2, 4, 6 or 10 filters. Filter types include Parametric, High-Shelf, Low-Shelf, Variable-Q High-Pass, Variable-Q Low-Pass, All-Pass, Band-Pass and Notch. Multiple PEQ's may be linked provided so that they are the same size (same number of filters). Individual filters can be adjusted within the frequency response display by Left-Click dragging their control left/right for frequency and up/down for amplitude. In some filter types, Right-Click dragging adjusts Bandwidth or Q.

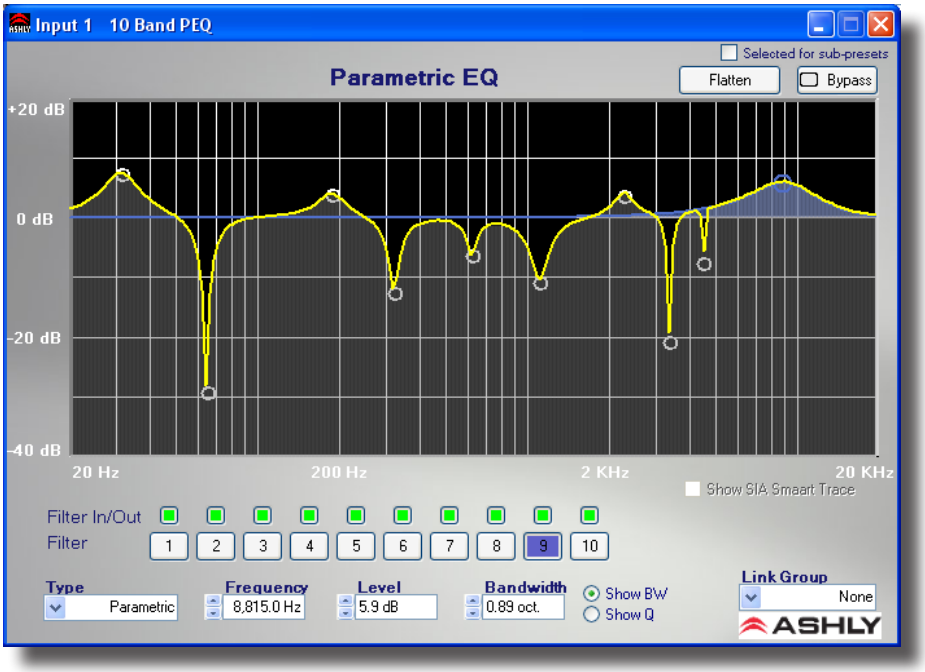

Parameters

Filter (number) - Current active filter (highlighted).

Filter In/Out - Green = filter in (engaged), Red = filter out (disengaged).

Filter Type - Selected filter type. The types are:

Parametric: Symmetric boost/cut, allowing individual adjustment of center frequency, level and bandwidth.

High-Shelf: Asymmetric boost or cut with "shelving" shape. Allows adjustment of the corner frequency and amplitude. Slope can be selected as 6 dB/octave or 12 dB/octave.

Low-Shelf: Mirror-image of High-Shelf.

All Pass: Provides no change in amplitude, but -180 degrees of phase shift at corner frequency.

Notch: Infinite cut at specified center frequency, with adjustable bandwidth or Q.

Variable Q HPF: Second Order High Pass filter with adjustable Q.

Variable Q LPF: Second Order Low Pass filter with adjustable Q.

Band Pass: This will pass signals within the filter's response region. It allows adjustment of center frequency and Bandwidth/Q. Gain is 0 dB at the center frequency.

Frequency - Selected filter center/corner frequency.

Level - Selected filter boost/cut amplitude.

Bandwidth - Selected filter bandwidth (or Q). .

Filter Type Details

Parametric EQ Filters

Parametric EQ uses peak filters with the ability to control boost or cut, frequency center, and bandwidth. Think of one band of parametric EQ as a single graphic equalizer fader, except that the frequency is variable, and that the bandwidth, or how "wide" the filter affects the frequency spectrum at the center frequency, is also variable. The smaller the bandwidth, the less the audio signal on either side of the frequency center is boost or cut, whereas a larger "wider" bandwidth produces an audible change to the overall tone of a signal. Parametric filters are best used to hunt down and eliminate problem feedback frequencies, add or remove a characteristic "hot spot" from microphones, or clean up room resonance situations. It is well worth the time becoming proficient with parametric EQ filters, as they offer the best solution to many EQ problems.

Parametric filters have a boost/cut range of +15dB to -30dB. There is more cut than boost because one of the more common uses for parametric filters is to dramatically cut, or "notch out", very narrow frequencies (low bandwidth) in order to eliminate system feedback problems.

Every instance of a parametric EQ filter has a center frequency selected. The factory default is 1kHz, but each filter's center frequency is adjustable from 20Hz to 2000Hz in 1/96 octave steps. Carefully sweeping a narrow bandwidth filter through a problem feedback area, with just a slight boost, is a quick way to find the exact frequency causing trouble. Once the offensive frequency has been found, cut the filter's level, and the adjust the bandwidth as narrow as possible while still eliminating the feedback problem. Bandwidth is adjustable from about 1/64 octave to four octaves, and the lower the bandwidth, the less audible the filter action will be. Finding the problem frequency is relatively easy, but finding the best combination of cut and bandwidth takes a little practice. Again it is well worth the time getting comfortable with the notching procedure, so that problems can be quickly addressed with a sufficient but minimal amount of correction.

Shelving EQ Filters

1st order filters use a gentle 6dB per octave slope, while 2nd order filters use a 12dB per octave slope for a more pronounced boost or cut. All shelving filters have a boost/cut range of +/- 15dB. Low shelving filters have a frequency range from 20Hz through 2kHz, the high shelving filters range from 3.886kHz through 20kHz. Shelving filters are most useful as broad tone controls to boost or cut the high end or low end of an audio signal's frequency content. Because they affect a wider spectrum of audio, they are not as suitable for feedback control as parametric filters.

All-Pass Filters

The all-pass option is a 2nd order all-pass filter which provides a -180 degree phase shift at the corner frequency. At very high frequencies the phase delay approaches -360 degrees. All-pass filters may be used to add frequency dependent phase shift or phase delay to the audio signal path. It does not produce a measurable effect on the magnitude response of the signal.

Feedback Suppressor (Inputs only)

The Feedback Suppressor (FBS) provides automatic feedback control. This is done by constantly monitoring the audio and automatically adjusting any one of 12 filters to remove feedback. Notch and Parametric Filter types are used, depending on the characteristics of the feedback. Because feedback suppression is more effective on an single input rather than an output mix of channels, the FBS is only available on inputs, and only at the 48 kHz sampling rate. The FBS is DSP resource-intensive, so if a FBS is used, the FIR filter on the same channel's output gets disabled in order to allow the DSP power necessary for the FBS.

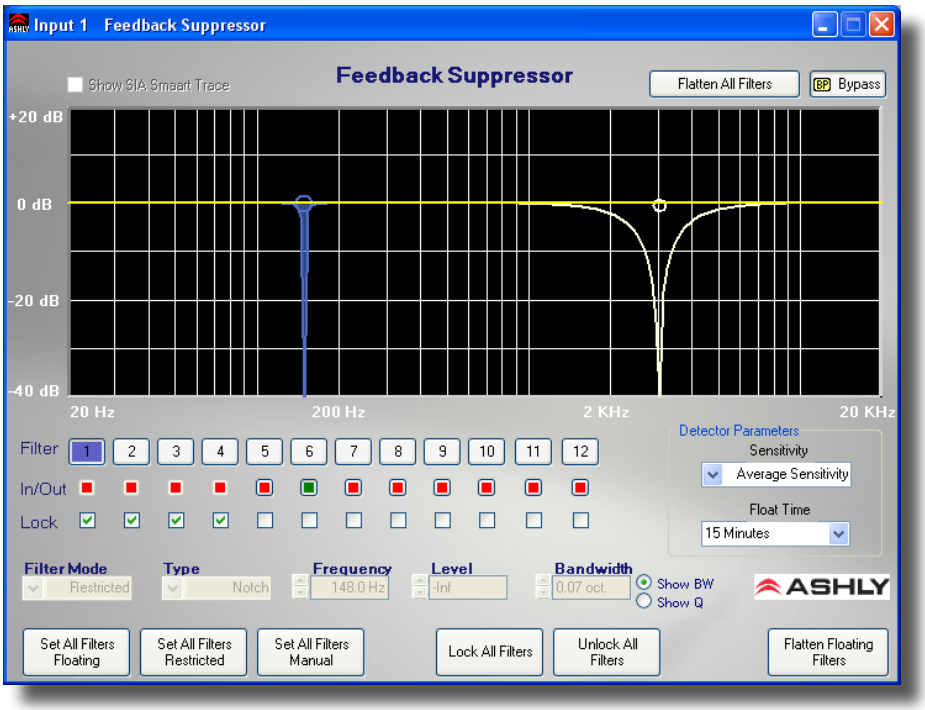

Filter Parameters

Filter (number) - Current Active Filter (highlighted).

Filter In/Out - Green = Filter In (engaged), Red = Filter Out (disengaged).

Filter Lock - Locks Filter at its current setting, when locked the detector will no longer adjust the filter.

Filter Mode - There are three filter modes:

Restricted: Filter will only broaden or deepen.

Floating: Detector may release filter after float time or modify filter type.

PEQ: Detector will not modify the filter however the user may control the filter.

Type - Selected Filter Type (Parametric or Notch).

Frequency - Selected Filter Center/Corner frequency.

Level - Selected Filter Boost/Cut amplitude.

Bandwidth - Selected Filter Bandwidth (or Q).

Feedback Detector Parameters

Sensitivity - Detector Sensitivity to feedback

Float Time - Time before a floating filter will start to release.

Background Information

The feedback suppressor uses both notch filters and parametric filters to automatically and quickly suppress multiple feedback tones and also produce a smooth equalized response which sounds pleasing for music and speech program. Before using the FBS (Feedback Suppressor), it is helpful to understand the following basic concepts in order to effectively suppress feedback and achieve good sounding audio program.

Each of the 12 FBS filters available on each FBS input channel can be selected between three different modes:

Restricted - The filter's attenuation level can only be made deeper, or filter bandwidth made broader by the FBS.

Floating filter - The filter's parameters are dynamic in that the FBS will slowly remove the filter if no longer needed and redeploy at a different frequency as needed. Only floating filters are affected by the Float Time parameter which is the time after which the FBS will slowly remove the filter.

Manual filter - The filter is not automatically controlled by the FBS, but can only be controlled by the user.

The FBS will automatically use available restricted filters first. If there are no more restricted filters available, the FBS will automatically use floating filters. The FBS will not automatically change manual filters.

The Sensitivity Control simply adjusts how sensitive the FBS algorithm is to detecting feedback and inserting filters. For example, a setting of Very Sensitive means the algorithm will aggressively look for anything that could be feedback and hence it may often insert filters on musical tones. A setting of Very Insensitive means that the FBS would only insert a filter in the presence of a prolonged feedback tone with very little background noise. The optimal setting of the Sensitivity control depends on both the spectral content of the audio program (how much the musical instruments sound like feedback), and also on the amount of background music and noise which tends to mask feedback from the detector. It is best to start with an Average Sensitivity setting and experiment.

A Locked filter means that the filter is prevented from being changed in any way, either automatically by the FBS or manually by the user. To change or reset a filter, it must first be unlocked.

FIR Filter (Outputs only)

The FIR (Finite Impulse Response) filter is typically used when a speaker manufacturer develops and provides a proprietary FIR coefficient file that corresponds directly to their own loudspeaker or speaker cabinet, addressing frequency and phase issues based on their own measurements and formulations. Plugging in a FIR filter block on a DSP output and then clicking on it will prompt the user for a *.fir or *.csv text file, which is then loaded and applied to the output DSP. The two file types will have identical coefficient code, however the *.fir file may add comments (designated by a semi-colon) or a key=value pair definition such as sample rate. Either file type will work with Protea[ne] Software.

Simple *.fir file example:

```
; comments section

sampleRate = 48000

+0.0000042920
+0.0000030236
-0.0000040482
```

Simple *.csv file example:

```
+0.0000042920
+0.0000030236
-0.0000040482
```

Protea software does not offer the ability to view or edit the EQ curve produced by a FIR filter. Also, FIR filters are very DSP intensive, so if a FIR filter is used on an output channel, that same numbered input channel's Feedback Suppressor will not be available in order to allocate enough DSP power to the FIR filter. FIR filters can only be used on outputs, only at 48kHz sampling rate, and can have from 2 up to 384 taps.

4) Crossover Functions

Four-Way, Three-Way, and Two-Way Crossover (outputs only)

The Crossover tool offers a convenient way to configure amplifier outputs. Depending on whether the desired crossover is two, three, or four-way, all High-Pass (HPF) and Low-Pass Filters (LPF) are automatically placed on output channels. Initial crossover frequencies are assigned with the default filter type of 24dB/oct Butterworth, both of which can be changed. In the frequency response display screen, all currently loaded filter frequencies are available for editing by Left-Click dragging a HPF/LPF node, or by using the text boxes below the GUI.

***Warning**: High Pass Filter determines the lower frequency limit of the signal, while the Low Pass Filter determines the upper frequency limit. Be careful not to accidentally send low frequency signals to high frequency drivers. Check the loudspeaker specifications to determine a safe operating frequency range.*

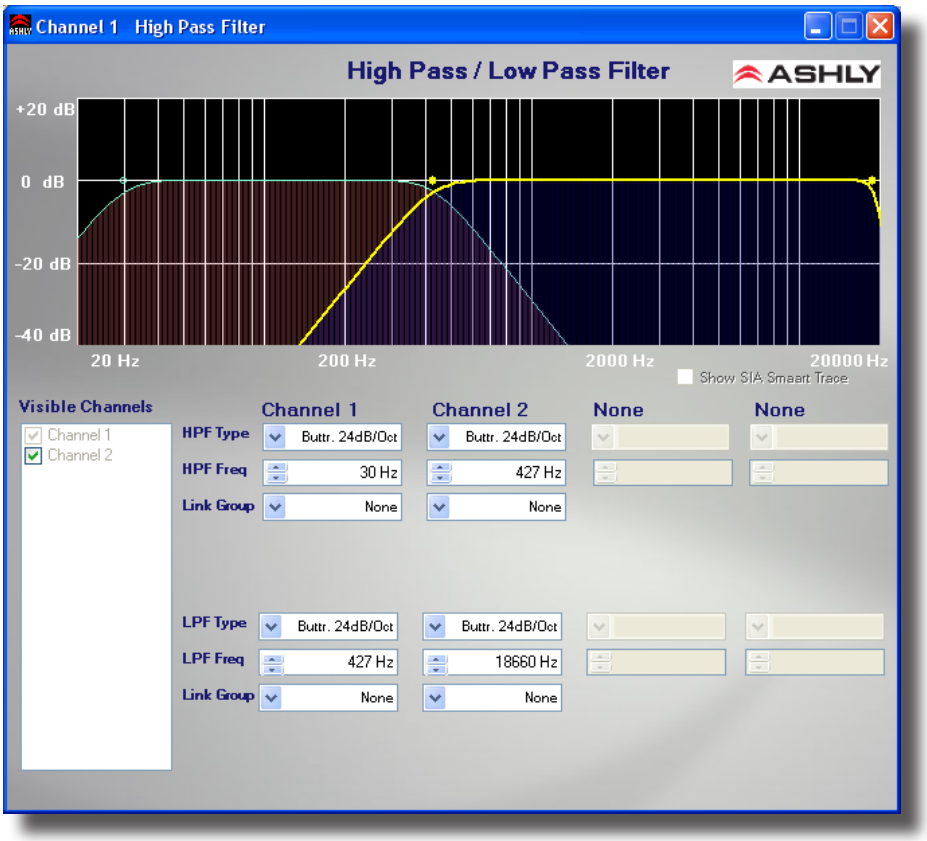

Available Filter Types:

Bessel - 2nd, 3rd, 4th and 8th order (12, 18, 24, 48 dB/octave)

Butterworth -2nd, 3rd, 4th and 8th order (12, 18, 24, 48 dB/octave)

Linkwitz-Riley -2nd, 4th and 8th order (12, 24, 48 dB/octave)

The following paragraphs summarize the three primary filter types offered:

Butterworth

Butterworth filters individually are always -3dB at the displayed crossover frequency and have a "maximally flat" passband and sharpest transition to the stop-band. When a Butterworth HPF and LPF of the same corner frequency are summed, the combined response is always +3dB. Note that when 12dB/octave Butterworth HPF and LPF filters are used to create a crossover, the polarity of one of the outputs may need to be inverted to compensate for the phase shift of the filter.

Bessel

These filters, as implemented in Ashly's NE devices, are always -3dB at the displayed crossover frequency. Bessel filters have a maximally flat group delay. Stated another way, Bessel filters have the most linear phase response. When a Bessel HPF and LPF of the same corner frequency are summed, the combined response is +3dB for 12dB/oct, 18dB/oct, and 48dB/oct Bessel filters, and -2dB for 24dB/oct Bessel filters. One of the outputs may need to be inverted when using either 12dB/oct or 18dB/oct Bessel HPF and LPF's to create a crossover to compensate for the phase shift of the filter.

Linkwitz-Riley

The 12 dB/oct, 24dB/oct, an 48dB/oct Linkwitz-Riley filters individually are always -6dB at the displayed corner frequency, however the 18dB/oct Linkwitz-Riley filters individually are always -3dB at the displayed corner frequency. The reason for this is that Linkwitz-Riley filters are defined in terms the summing of two adjacent HPF and LPF filters when used in a crossover, rather than defined in terms of the pole-zero characteristics of individual filters. The 18dB/oct Linkwitz-Riley individually are 18dB/oct Butterworth filters in that they have Butterworth pole-zero characteristics and also satisfy the criterion for Linkwitz-Riley filters. When a Linkwitz-Riley HPF and LPF of the same corner frequency are summed, the combined response is always flat. With 12dB/oct Linkwitz-Riley crossover filters, one of the outputs must be inverted or else the combined response will have a large notch at the crossover frequency.

Crossover Notes

When used in a crossover, filter type will affect the way adjacent pass-bands interact near the crossover point. When electrically summed, 24dB/octave Linkwitz-Riley filters produce a flat transition through the crossover region, assuming that the HPF and LPF are set to the same corner frequency. This makes 24 dB/octave Linkwitz-Riley filters quite popular. However, crossover filter types must be carefully selected to match the acoustic response of the specific loudspeaker system. Please consult the manufacturer of the loudspeaker system for recommended crossover frequencies and filter types.

HPF and LPF filters

HPF and LPF are single ended filters similar to crossover filters, and are available on inputs and outputs.

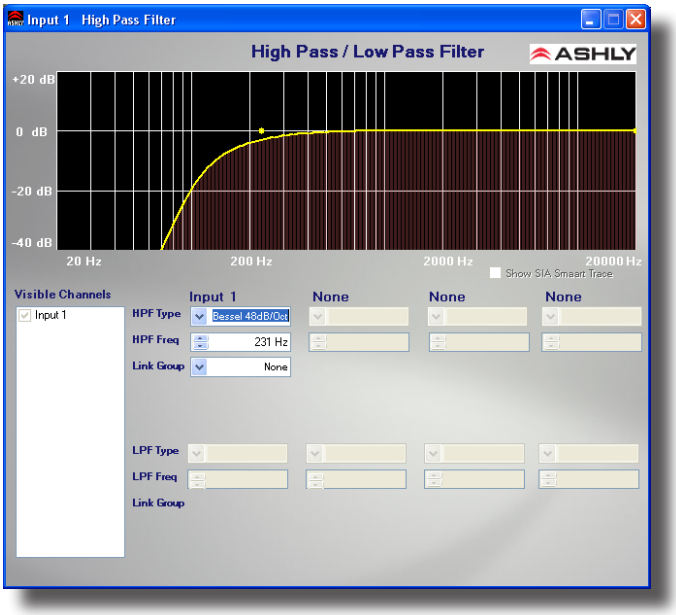

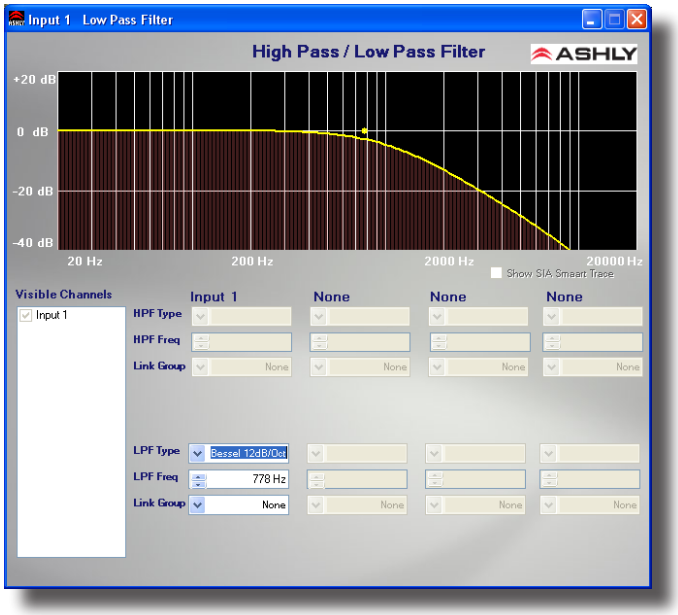

5) Delay

Speaker Delay and Delay

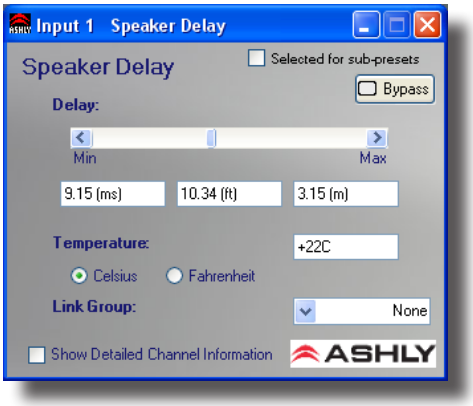

Both the Speaker Delay and Delay allow the signal to be delayed by a given number of samples (a given amount of time). The only differences between the Speaker Delay and Delay is the total amount of delay available and the amount of DSP resources used by each block. The Speaker Delay uses far less DSP resources than the Delay and should be used first, whenever possible. Note that the total amount of delay available from each block will vary with sampling rate. For convenience, if both the standard and extra delay are used, parameters for both can be displayed simultaneously on a single control screen.

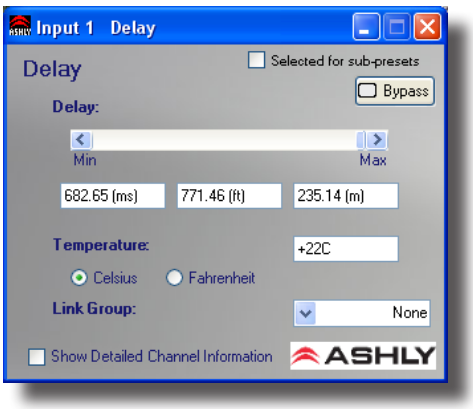

For linking purposes, Speaker Delays are linked only to other Speaker Delays, and Delays are linked only to other Delays. Typically the Speaker Delay is useful when aligning speaker drivers or other locations where only a short delay is required. This leaves processing available for other functions.

Parameters

Delay - Amount of delay added to the signal (presented in milliseconds, feet, or meters).

Temperature - Local temperature, used to calculate the speed of sound though air and thus the distance orresponding to the delay time.

Link Group - The link group to which the delay's parameters will be linked.

Show Detailed Channel Information - If both Base and Extra Delay are used, this allows all parameters to be viewed in a single window.

6) Metering

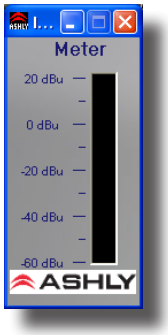

The Audio Meter does not affect the audio signal. It allows the signal to be monitored at any location in the signal chain. Display range is -60dBu to +20dBu.

7) Signal Generator

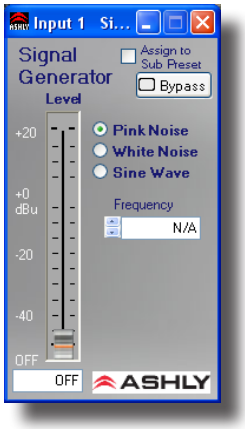

The Signal Generator creates its own Pink Noise, White Noise or Sine Wave output, replacing any audio signal in the chain before it. When bypassed, the Signal Generator allows the input signal to pass to the output of the block unaffected. White Noise is randomly generated broadband noise, while Pink Noise is band-limited to 20Hz - 20kHz to contain equal energy in any octave (-6 dB per octave low-pass filtered). The Sine Wave has adjustable frequency. These signals may be generated at any level from -50dBu to +20dBu.

Parameters

Mode - The type of signal to be generated (Pink Noise, White Noise, Sine Wave)

Frequency - Frequency of signal to be generated (sine wave only).

Level - RMS level of signal generated.

Bypass - Turns off generated signal, and allows input to be passed through to output unaffected.

9.4d DSP Control Tab functions, continued . . . . .

Input/Output Matrix Router - Any input can be routed to any or all outputs. Click and drag from the input to output to assign routing. For faster routing of a single input or output to multiple channels, highlight its node and then press Ctrl+Click over the desired nodes to connect to. To delete a route or clear the matrix, right click on the routing line or node. Also, right click anywhere in the matrix area to bring up a menu of common routing choices.

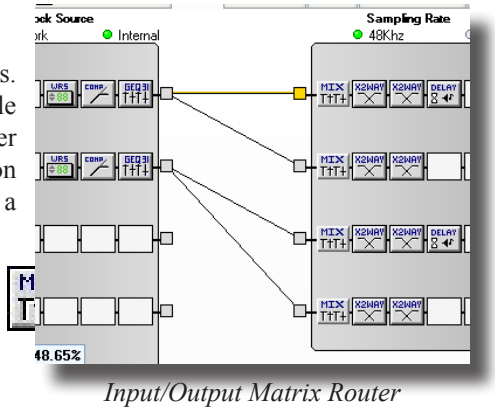

Input/Output Matrix Router

Matrix Mixer and Auto Mixer

Matrix Mixer

nX amplifiers use the Matrix-Mixer to adjust the level of an input channel source to a routed output, typically at unity gain. Inputs must be routed to an output channel using the Matrix Router (see previous section), then must be mixed using that output channel's Matrix Mixer, either manually or with the Automixer. Practical use of the Auto-Mixer is minimal on nX amplifiers since there are only two or four input channels and no on-board mic preamps. Nevertheless, a description of all features follows:

Matrix Mixer/Auto Mixer Controls and Indicators

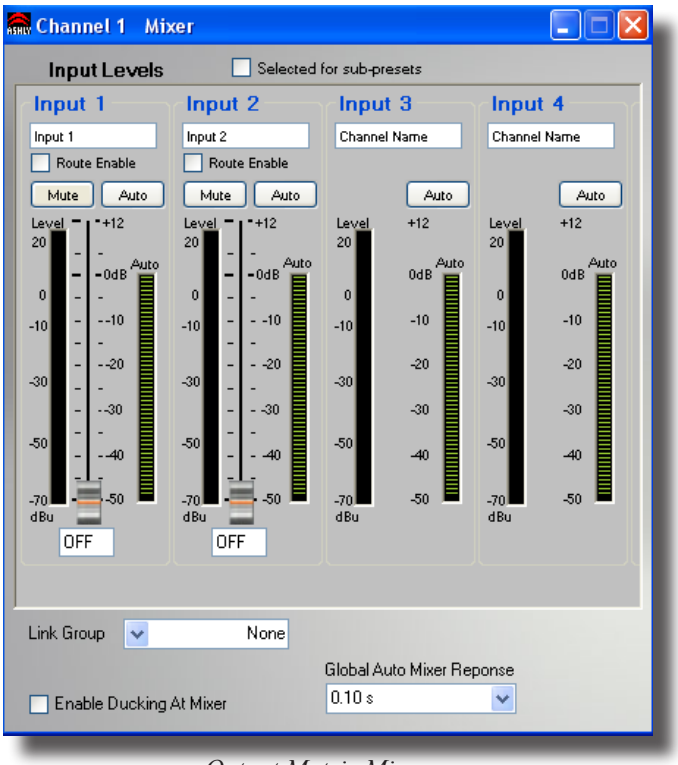

Output Matrix Mixer

Input Name - An editable text label for the user to identify the name of the input signal. This is the same text label as shown on the inputs in the DSP Controls window.

Route Enable checkbox - Selected to make the mixer input signal connection. Checking or unchecking this box has the same affect as dragging or deleting the signal routing lines in the DSP Controls window matrix mixer.

Mute Button - Mutes the input signal before the auto/manual mixer. *This does not light the front panel Mute LED*.

Auto Button - Selects the mixer input channel as an automixer channel when pressed in, versus a manual mixer channel when pressed-out. Manual and automixer channels both get summed into the output mix, however the manual channels operate independently and do not participate in the automatic mixing operation.

Fader Control - Adjusts the mixer input level for an automatic or manual mixer channel before any automatic mixing takes place.

Level Meter - Displays the input signal level *prior* to the fader control or automixing attenuation. This meter is a peak-responding signal level meter.

Duck Indicator - Displays when the input channel is being ducked (attenuated) by the ducker function. This indicator is only visible when ducking is enabled at the mixer.

Auto Meter - Displays the automixer's attenuation applied to the signal before mixer summing.

Channel Gain Value - Shows the total decibel gain applied to the input channel which is combined from the mixer fader control and any remote level controls assigned to the matrix mixer. This gain value does not include the automixer gain value, and is applied to the signal before the automixer.

Link Group - Allows multiple output mixers to be linked such that any control change made to one mixer will make an identical control change to any other mixer assigned to the same link group. The Route Enable control *does not* get linked however, in order to maintain separate channel routing when controlling a stereo mix.

Global Automixer Response - Controls the response time constant of all output automixers. The automixer response time is the speed in which the automixer makes gain changes in response to the input signal RMS levels. This value is shared among all automixers.

Enable Ducking At Mixer - Checkbox allows selecting the ducking action to be applied at the mixer's summing point rather than in the signal path prior to the mixer. This allows some output mixer zones to have ducking action applied while other output mixer zones do not have ducking applied.

Auto Mixer

The automixer is designed primarily to automate the mixing of multiple speech microphones to follow the dynamic nature of the speech dialog and attenuate idle microphones. The automixer may also be used in conjunction with the Autoleveler, Compressor, or Gate on the input signal paths. This gives the user more advanced control of varied input signal levels produced by different talkers. A Feedback Suppressor function may also be used on the inputs to further help control feedback problems.

Ashly Auto Mixer Technology

The automixer function is a "gain-sharing" type which automatically makes smooth gain transitions on all automixer input channels to achieve a constant total system gain. This gain-sharing method of automixing has been found to be superior to "gating" automixers due to the following characteristics:

1) The automatic gain action has a smooth transparent sound as though a person were mixing the inputs to follow the audio program rather than rapid gating on-and-off of channels.

2) Properly designed gain-sharing automixers correctly adjust for mixing of coherent versus non-coherent signals for a more consistent final mix level without feedback as channel gains are automatically changing.

3) A gain-sharing automixer is easier to setup and adjust without the need for threshold, attack, release, depth, and Number of Open Mics (NOM) controls.

Mixer input channels can be individually selected as auto-mixed or manual mixed, all summed together to the same mixer output. Channels which are selected as Auto will participate in the automix in that they will contribute to the automatic adjustment of other automix channel gains. Likewise, their channel gain will be affected by the signal level present on other automix channels. Manual mixer channels (not selected as Auto) will mix independently of the automixer channels into the output, only controlled by their fader setting. The fader on Auto channels still controls the input level before automatic mixing takes place so that more of the system gain can be applied to one channel versus another.

Automixer Setup

Setting-up the Ashly gain-sharing automixer is quite simple compared to other gating-type automixers. The following procedure is recommended for most multi-microphone speech applications.

1) Start with all mixer faders off and the Automixer Response Time set to 0.1 seconds.

2) Select the input channel routes as desired in the matrix mixer and select Auto on the channels to be automixed.

3) Start with one of the main speech channels, or one which is centrally located. Slowly increase the fader for this one channel until feedback just starts, then lower the fader approximately 3 dB to stay comfortably below feedback. This sets the total mixer system gain.

4) Now increase the other routed input channel faders to approximately the same position as the first channel used in step 3. The system will not feedback because the automixer will slowly attenuate the active channels as more channels are turned-on to maintain a constant total system gain as set in step 3.

5) During the program, individual channel faders may be raised or lowered to adjust for the weakness or strength of the respective talkers while the automixer is active.

9.4e Input Source Tab

Inputs are analog balanced line, AES3 digital audio (optional), or network audio (optional). Setting the input source to Auto gives priority to network audio, then AES3, then analog.

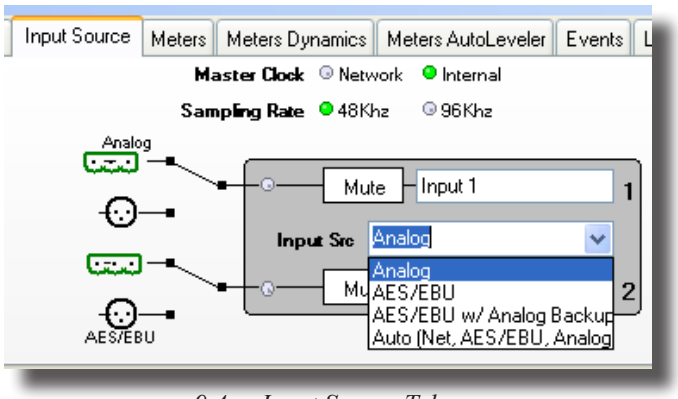

9.4e - Input Source Tab

9.4f Metering Tabs (not shown)

There are three meter tabs, including general I/O Meters, Meter Dynamics for gate and compressor/limiter functions, and Auto-leveler Meters. All meter tabs display both DSP input and DSP output level for each channel.

9.4g Events Tab

The Events (Event Scheduler) tab allows the user to program specific device actions to occur based on the time of day or day of the week. Scheduled events can include Preset Recall, Power Status Change, Channel Mute, Output Source Select, and certain remote control settings. Up to 100 events can be scheduled. All event schedule data is stored in the amplifier.

A common use of the event scheduler would be for programmable energy efficiency. Schedule the amp to go idle or off during down times, and turn back on when the facility opens for business.

The date and time of the amplifier's Real Time Clock (RTC) can be manually set by the user, or set to the host PC clock. There is an internal battery that powers the RTC that has an estimated life of 12 years. If this battery fails, the RTC will not function until the battery is replaced by a qualified service technician.

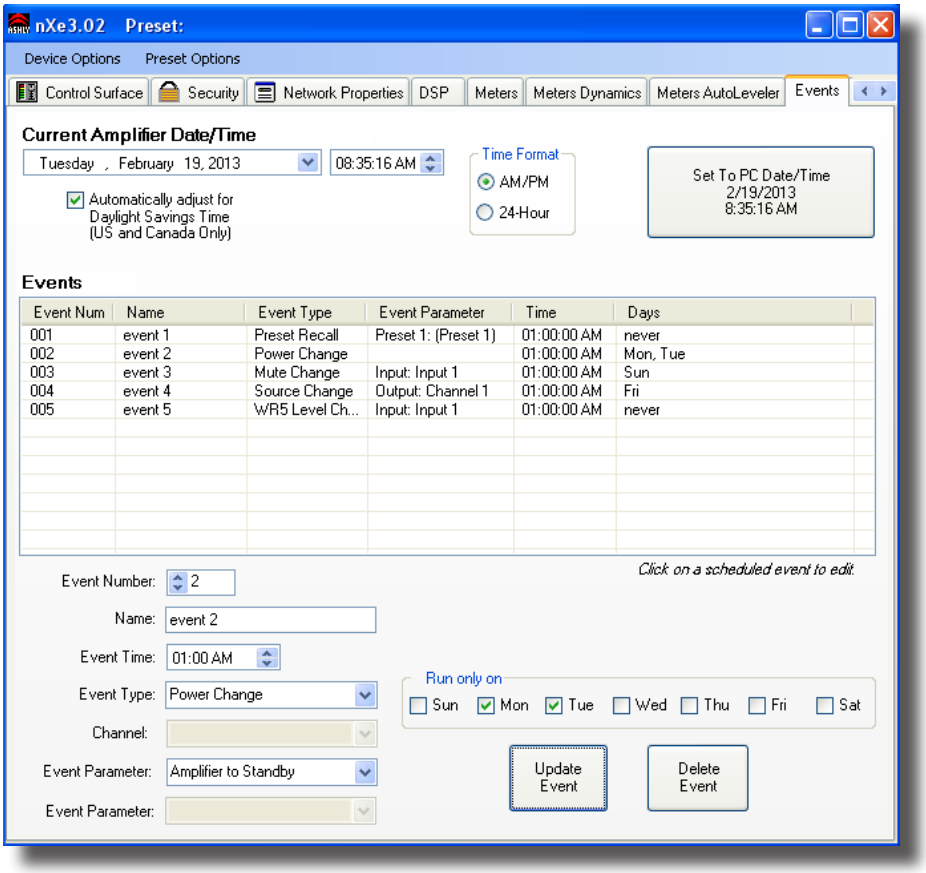

9.4g - Event Scheduler Tab

9.4h Fault Log Tab (not shown)

The Fault Log is a register of amplifier events triggered by fault conditions and date/time changes . It is useful for diagnosing an amplifier/system problem by allowing the administrator to review events which may have led to a fault condition. The log can be saved as a XML text file.

❑ 10 REMOTE CONTROL FUNCTIONS

This section details nXe and nXp amplifier remote control *functions* (see section 11 for remote control by Ashly *device*). Base nX model amplifierss have no remote control capability other than DC level control.

iPad control of select amplifier functions: "Ashly Remote" can be downloaded from the iTunes App Store. "Ashly Remote" is an application used to create a custom and secure graphical user interface (GUI) for Ashly networked devices via iPad wireless control. The sound system designer creates a GUI specifically tailored for the end user and their networked Ashly products, allowing them remote control access to select audio functions. Visit the Ashly website for details.

	Function	Control Device(s)
•	**Power On/Standby**	iPad, Contact Closure, Protea^{ne} Software, Event Scheduler
•	**Front Panel Controls Disable**	Protea^{ne} Software
•	**Sleep Mode and Clock Timer**	Protea^{ne} Software
•	**Remote Preset Recall**	iPad, Protea^{ne} Software, Contact Closure, WR-1.5, WR-2, WR-5, neWR-5, Event Scheduler
•	**Remote Level Control**	iPad, WR-1, WR-1.5, WR-5, neWR-5, RD-8C, FR-8/16, Event Scheduler, Protea^{ne} Software
•	**Remote Channel Mute**	iPad, WR-5, neWR-5, FR-8/16, Event Scheduler, Protea^{ne} Software
•	**Remote Zone Source Selection**	iPad, WR-5, neWR-5, Event Scheduler

10.1 On/Standby

nX amplifiers have four possible power states; OFF, ON, STANDBY, and SLEEP.

1) **Remote Control Standby - Using the Contact Closure** - On nXe or nXp models only, the two back panel Euroblock connector pins labeled "STBY" and "G" can be wired to a switch and cause the amplifier to go into standby mode when closed. Standby mode draws <75W of mains power. For remote standby to work, the power switch must be turned on *or* turned on but disabled through Protea^{ne} software. To remove the amp from standby mode, open the STBY switch. Remote standby is unavailable on nX models.

2) **Remote Control Standby - Using the Software Control Surface-** nXe or nXp amplifiers can also be put into standby mode from software, functioning the same as the contact closure standby circuit on the back panel. Clicking on Standby in the software control surface places the unit into standby mode until further action is taken to bring the amp out of standby. The software standby control does not override the Remote Standby contact closure control, they both remain active at all times. *See Control Surface functions described in* section 9.4a.

4) **Remote Control Standby - Using the Event Scheduler** - Protea^{ne} software offers an event scheduler for several key functions including switching the amplifier into standby mode. With the event scheduler, the installer can assign one or more times of day or days of the week for the amplifier to automatically go into and come out of standby mode, disabling overall function and conserving power during those times when the amplifier is not being used. *See the Event Scheduler description in* section 9.4g.

10.2 Front Panel Controls Disable

The power switch and attenuators on nXe and nXp amplifiers can be disabled together from software. If the power switch has been disabled while the amplifier is on, the power switch LED remains lit and the front panel Disable LED is also lit, indicating the power switch is inactive. If the AC mains power is removed while the power switch is disabled, the amplifier still maintains the <power switch disabled> status and will turn back on in the same state when AC power is restored. When the attenuators are disabled, they revert to their full CW value.

**Note*: Quickly pressing and releasing the recessed front panel factory reset switch when the amp is on will toggle the amplifier through the four possible sleep and front-panel-control-disable modes, as shown in section 4.3.

10.4 Sleep Clock Timer

On all amplifier models, the sleep clock timer can be enabled or disabled using the front panel factory reset switch as described in section 4.3. On nXe and nXp series models only, the sleep clock timer can be adjusted from zero (off) to 120 minutes. If sleep mode is enabled, and there is no audio activity for the duration of the sleep clock timer (fixed at 30 minutes for nX series), the amplifier goes to sleep until signal is present again or until the power switch is pressed.

Note: The amplifier can not be directly put to sleep or awakened from sleep using software or the event scheduler.

10.5 Preset Recall

Preset File: A preset file is created when the user saves all current software control settings for this amplifier, essentially taking a snapshot of the entire amplifier configuration. nXe and nXp amplifiers can store up to 31 user-named presets. Individual preset files stored on a PC use the extension (*.pne). A preset is saved to the amplifier by using <Preset Options/Save Preset To (device name)>, or saved to a PC using <Preset Options/Save To Disk>.

Sub Preset File: A sub preset file consists only of individually selected DSP parameters, and as such requires less load time when it is recalled. Each DSP function has a check box that assigns it to a sub preset, then the sub preset is saved using <Preset Options/Save Sub Preset to (device or disk)>. Sub preset filenames also use the *.pne extension, so for best results it's a good idea to rename the file to indicate that it is a sub preset and not a full preset.

Presets and sub presets can be recalled to the nXe or nXp amplifier using the following methods:

1) **Protea^{ne} Software -** Using Protea^{ne} software, click <Preset Options/Recall (Sub) Preset from Disk>, or <Preset Options/Recall (Sub) Preset from (device)>.

2) **Contact Closure** - There are four back panel contact closure pins labeled "Preset 1-4". When any one of those pins is connected to the preset ground pin, the amplifier loads the preset or sub preset 1-4 as stored in amplifier memory.

3) **WR-5** - A WR-5 appears in software as a captive device to its host amplifier. The six buttons on the WR-5 can be programmed to recall a specific preset or scroll through a defined list of presets.

4) **neWR-5** - A neWR-5 will appear in the software menu tree as a device on the network, and must be assigned to the nXe or nXp amplifier under control. Like the WR-5, the six buttons on the neWR-5 can be programmed to recall a specific amplifier preset, or scroll through a defined list of presets.

5) **Event Scheduler** - Protea^{ne} software offers an event scheduler for several key amplifier functions including preset recall. With the event scheduler, the installer can assign one or more times of day or days of the week for the amplifier to automatically load a new preset.

Caution: *A new preset may have dramatically different settings capable of damaging sound system components, so be careful not to recall the wrong preset while the system is on.*

10.6 Gain Control

1) WR-1 DC Level Control - The WR-1 remote DC level control potentiometer functions as if it were a front panel attenuator but in a remote location. Attenuation from a remote DC level control attenuator is cumulative with all other attenuation for a given channel, including the front panel level control.

1) WR-1.5 DC Level Control - The WR-1.5 offers a four position rotary switch for preset recall and a single DC level control potentiometer. The gain control functions the same as in the WR-1.

2) WR-5 - The WR-5 buttons can be programmed to select single or multiple input or output channels for remote gain control function. After programming one of the six buttons for gain control, then pressing that button, pressing the WR-5 up/down buttons will adjust the gain for all selected channels associated with that button. A gain range can also be set in software for each gain button, with a top and bottom limit assigned per button. *Note: To use this feature, a (ne)WR-5 Remote Gain tool must first be placed in one of the DSP processing blocks of the channels(s) to be controlled.* Refer to section 9.4d.

3) neWR-5 - The neWR-5 function buttons are assigned gain control function in the same manner as the WR-5, but instead of connecting to the amplifier's data port, the neWR-5 uses an Ethernet network connection.

4) RD-8C - The RD-8C is programmed from Protea^{ne} software when wired to a nXe or nXp amplifier under software control. The RD-8C will appear in software as a captive device to the host amplifier. Place a Remote Gain Control tool in the DSP section (input or output) of Protea^{ne} software to allow the user to assign each RD-8C fader for control of a channel or group of channels. The RD-8C also has a mute button for each fader which will mute all channels associated with that fader.

5) Event Scheduler - Protea^{ne} software offers an event scheduler for several amplifier functions including changes to WR-5 and neWR-5 remote control gain. With the event scheduler, the installer can assign one or more times of day or days of the week for the amplifier to automatically change WR-5 and neWR-5 channel gain parameters.

6) Protea^{ne} Software - Real time gain control from software is available using a variety of tools. These include the main amplifier's software control surface using the channel main fader, a single fader gain control placed on an input or output channel, a digital VCA group gain control placed on an input or output, or a WR-5 (or neWR-5) gain control.

10.7 Channel Mute

1) WR-5/RD-8C - WR-5 buttons can be programmed to mute and unmute single or multiple inputs or outputs.

The RD-8C has a mute button associated with each fader which mutes those channels associated with that fader.

2) neWR-5 - The neWR-5 buttons can be programmed to mute and unmute single or multiple inputs or outputs.

3) Event Scheduler - The event scheduler can be set to automatically mute or unmute single or multiple inputs or outputs at a predetermined day and time.

4) Protea^{ne} Software - The user can mute inputs or outputs in real time from within the software control surface, the DSP section inputs and outputs, and the input source section.

10.8 Zone Source Selection

1) WR-5 - A WR-5 is typically used to remotely control amplifier functions within one specific zone. The amplifier output(s) used to drive loudspeakers in this zone are selected in the WR-5 Remote software device window under <Zone Setup / Select Zone Outputs(s)>. The WR-5 buttons can then be programmed to select one or more input channels for that zone under WR-5 control. When multiple zone source select buttons are assigned uniquely different or overlapping inputs, each button will add to or subtract from the other's input selections, unless the Exclusive Source Selection box is checked in the zone setup, in which case *only* the current button's selected inputs will be used. The Disable Zone Level Control software checkbox allows input source selections to be changed from the WR-5, but not the output gain. The output gain can still be adjusted from software, but the WR-5 user is locked out from making zone output gain changes.

2) neWR-5 - The neWR-5 offers the same zone source selection capabilities as the WR-5, with the addition of programmable limits on output gain level.

3) Event Scheduler - Use the event scheduler <Output Source Select> feature to enable or disable a single input source on a specific amplifier output or AUX output.

❑ 11 ASHLY REMOTE CONTROL DEVICES

In addition to iPad control, the following Ashly devices are available for remote control of amplifier functions.

11.1 WR-1 Level Control (All nX models) - The WR-1 is a dual potentiometer remote volume control designed to fit in a standard wall electrical box, and is wired to the amplifier back panel Euroblock connector labeled "CH (1-4) Remote DC Level" using four conductor wire. If wiring a custom potentiometer other than the WR-1, connect +5V from the remote level control Euroblock connector to the potentiometer's CW pin, GND to the CCW pin, and the channel under control to the wiper. *Do not connect the WR-1 remote level control ground to any other external grounds.*

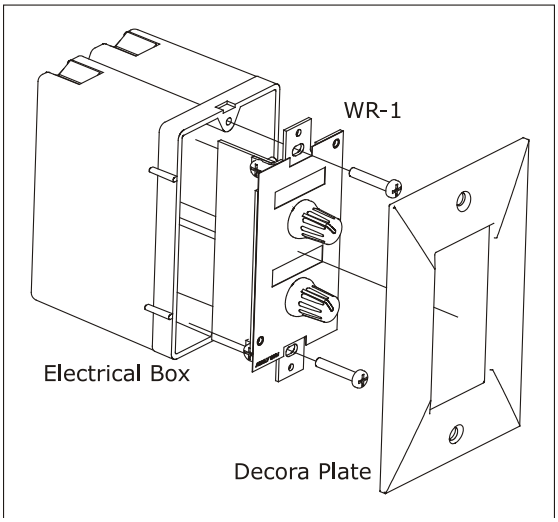

11.1 - WR-1 Assembly

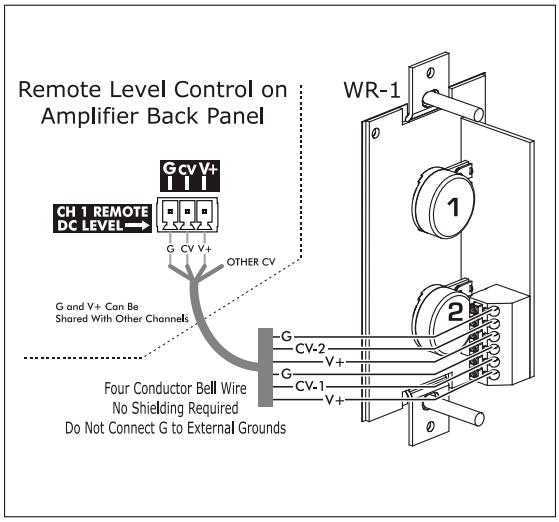

11.1a - WR-1 Wiring

11.2 WR-1.5 Level Control and Preset Recall Switch (Level Control all models, preset recall on nXe and nXp models only) - The WR-1.5 has a four position rotary switch for selection of stored amplifier presets 1-4, and a potentiometer for remote DC level control of one amplifier channel. Clear windows are provided for user generated labels.

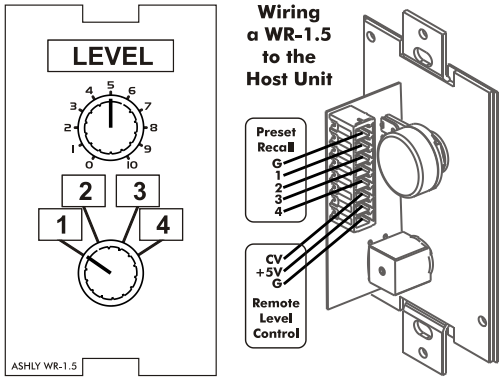

11.2 - WR-1.5

11.3 WR-2 Preset Recall Switches (nXe and nXp only) - The WR-2 allows selection of stored amplifier presets 1-4 using pushbutton switches. Each pushbutton switch is connected to a preset recall pin on the back panel of the amplifier under control. The terminal numbers correspond to the first 4 preset memory locations in the controlled amplifier. Pressing a button will select and load the corresponding amplifier preset. Clear windows are provided for a user-generated label.

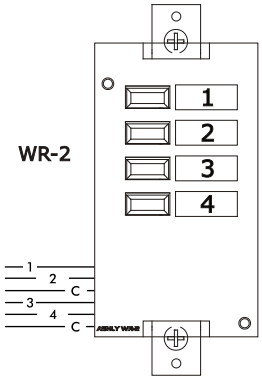

11.3 - WR-2

11.4 WR-5 Programmable Button Controller (nXp, limited nXe)

The WR-5 (owner's manual) is a programmable button remote control which mounts into a standard US electrical wall box and is wired to the four back panel data port pins labeled "G, +18, Out, and In". Maximum wire length is 1000 ft using #24 gauge twisted pair. A decora cover plate (not included) can be purchased at hardware stores to cover the electrical box and satisfy the aesthetic needs of the installation. The WR-5 is phantom powered from the amplifier. Up to four different WR-5 remotes can be wired in series and phantom powered from one amplifier, and more remotes can be added by using an Ashly RPS-18 remote power supply or equivalent. *To avoid potential static discharge disruptions to the WR-5 or it's data signal, be sure to connect the decora plate and WR-5 frame directly to Earth Ground at the point of installation. Do not use the data ground wire as Earth Ground.*

WR-5 buttons are programmed from Protea[ne] software after the WR-5 is wired to the amplifier and assigned a unique ID number in its WR-5 device window. Controlled functions include preset recall/scroll, mute, zone source selection, individual channel and matrix point level control. Each button has a status LED. A clear window is provided for custom button labels.

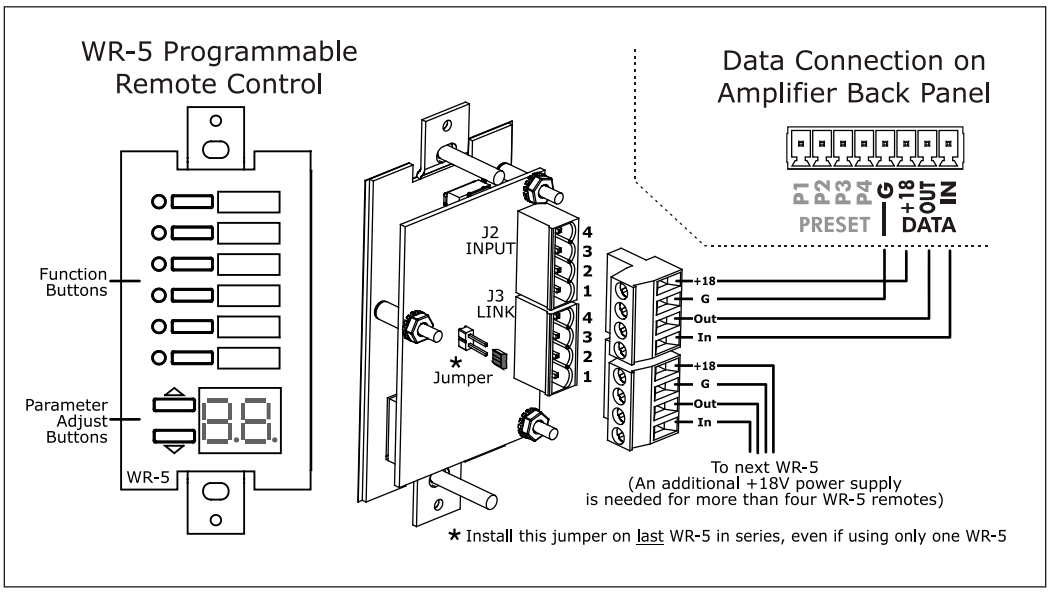

11.4 - WR-5 Wiring

11.5 RD-8C Serial Data Fader Control (nXp only)

The RD-8C and RW-8C are eight channel remote slide fader controllers which connect to the amplifier's data port pins "G, +18, Out, and In" for assignable remote level control of amplifier input, matrix mixer, or output gain stages. Maximum cable length is 1000 ft using #24 gauge twisted pair. The RD-8C is a desktop controller, while the RW-8C mounts as a wall plate using a standard North American 4-gang electrical box. Both units use Euroblock connectors for wiring.. There are eight channels and a master, each with a fader control and an on/off button. *Note: Only one RD-8C can be used per amplifier, and use of an RD-8C will exclude the use of the data port for a WR-5. One or the other remote control device may be connected, but not both.* For more information, see the RD-8C owner's manual on the ashly website.

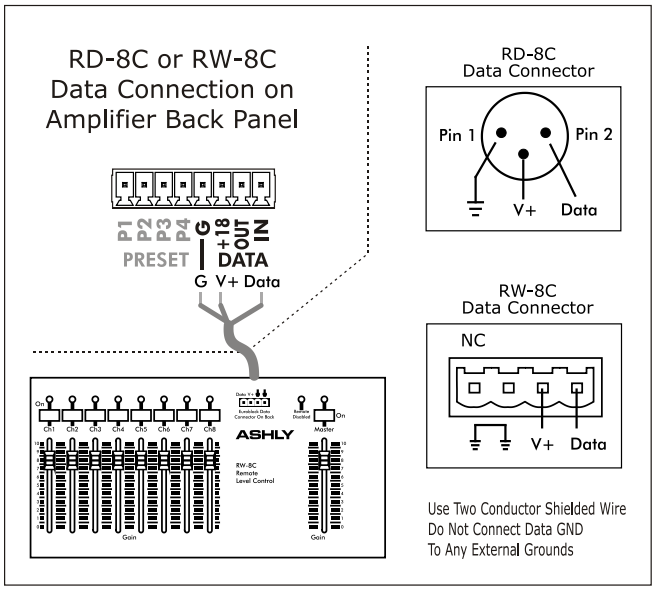

11.5 - RD-8C or RW-8C Wiring

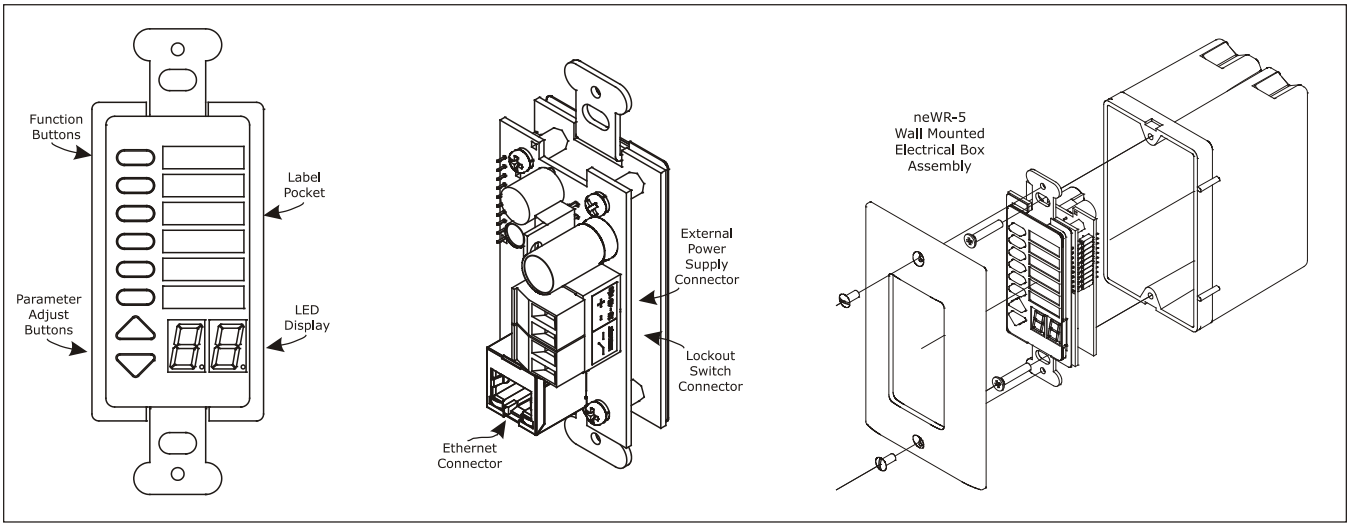

11.6 - neWR-5 Networked Programmable Remote Control

11.6 neWR-5 Programmable Button Controller (nXp, limited nXe)

The neWR-5 remote control is a networked version of the WR-5, using Ethernet instead of the data port to communicate with the amplifier. Connecting and powering the neWR-5 is done using Cat-5 Ethernet cable and an IEEE 802.3af Power over Ethernet (PoE) switch, hub, or in-line PoE injector. If PoE is unavailable, the Ashly RPS-18 (sold separately) provides 15-48VDC capable of at least 2 watts per neWR-5 and can be hard wired to the back of the neWR-5. PoE current draw is 38mA @48VDC and 80mA@15VDC. A decora cover plate (not included) can be purchased at hardware stores to cover the neWR-5 electrical box and satisfy the aesthetic needs of the installation. ***To avoid potential static discharge disruptions to the neWR-5 or it's data signal, connect the decora plate and neWR-5 frame directly to Earth Ground at the point of installation.***

The neWR-5 appears in the Protea^{ne} software device menu tree and must be assigned to the amplifier under control. The neWR-5 has six programmable function buttons which light up green, red, or amber to display status. Further information on LED status is found in the neWR-5 owner's manual. To the right of the function buttons is a clear window for a printed function label to be inserted. The two other buttons are used to adjust function parameters such as gain or preset number, and are indicated by the LED display.

There is also a hard-wired lock-out feature on the neWR-5, where the closing of a switch wired to the lock-out Euroblock renders all buttons inactive.

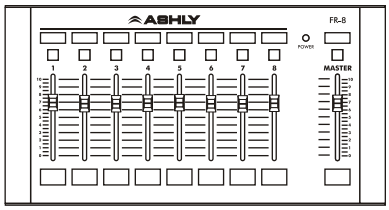

11.7- FR-8 (FR-16 Not Shown)

11.7 FR-8 and FR-16 Networked Fader Controller (nXp only) The FR-8 and FR-16 are Ethernet based remote fader control units, with the ability to assign each fader to control one or more input or output DSP gain stages (I/O mode), or control a DSP matrix mixer input level (Mixer Mode). Each fader's button LED can alternately be assigned as an A/B source select for that fader. The button LED for each fader is normally used to indicate assignable signal level/clip or mute status, but can alternately indicate A/B source selection for that fader. The FR remotes can be wall mounted to electrical box, panel mounted, or freestanding, and have a back panel contact closure for a control lockout switch. See further details in the FR-8/16 owners manual, available on the Ashly website.

11.8 INA-1 Inline RS-232 Adapter The nXe or nXp amplifier data port uses a proprietary serial communications protocol which can be converted to RS-232 using the Ashly INA-1 RS-232 Adapter. This allows the use of third party RS-232 controllers. Note that the INA-1 uses a 5mm Euroblock connector while the nX amplifier uses 3.5mm Euroblock connectors, thus the cable connection must be made accordingly. See the wiring diagram to the right.

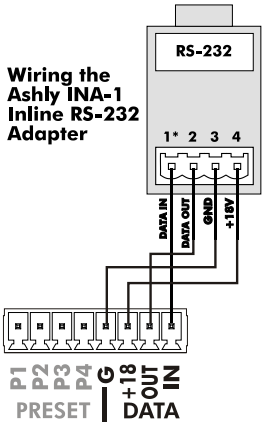

11.8 - RS-232 Adapter

11.9 Ashly Remote App for iPad® A custom and secure touch-screen control surface for the iPad® can be designed using the <Ashly Remote> application, available free on iTunes® or via the Ashly website. Controls, labels, and images are combined to manage key nXp amplifier functions over a wireles network connection.

❑ 12 AES3 DIGITAL AUDIO INPUT/PASS-THROUGH

nXe and nXp amplifiers support factory installed two or four channel AES3 input options, named OPAES2* and OPAES4*. The AES3 format uses two channels of digital audio transmitted over a single cable, maintaining a completely digital signal path into the amplifier stage or into the DSP stage if DSP is installed. Two channel amplifiers accept a two channel input with pass-through, while four channel amplifiers accept four input channels with pass-through. There is no AES3 output available from the amplifier's DSP section, only pass-through of the input.

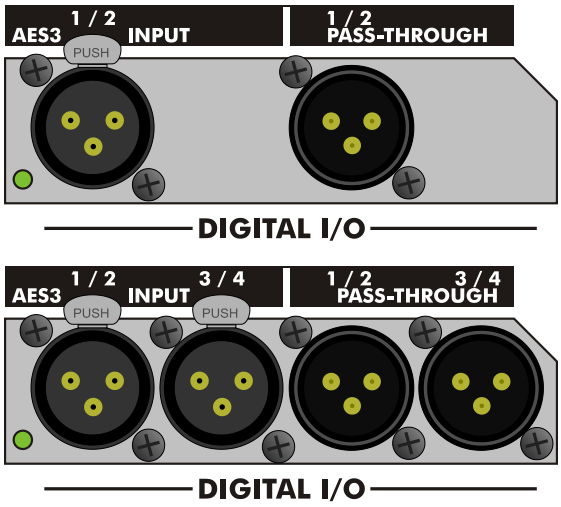

OPAES2 and OPAES4 AES3 Options

48kHz and 96kHz AES3 data rates are currently supported. The amplifier's internal sample rate must match the incoming AES3 sample rate (section 9.2h). A bicolor LED beside the AES3 connector indicates "Lock" (green) or "Error" (red) as long as the AES3 receiver is active *and* is providing the master clock source. The software AES3 control panel (shown below) shows the status of the AES receiver in greater detail.

12.1 Source Selection The input must be configured via software to accept the AES3 source before it can be used. See section 9.4e.

12.2 Cable Specification Standard 110 ohm microphone cable (3 conductor) with standard XLR connectors will support AES3 data transmission up to 100 meters.

12.3 Hardware Status Indicators

AES Status LED (green) - Receiver Rx1 is "Active", has locked onto an incoming AES/EBU signal, and data is ready for processing. *This LED is disabled when network audio provides the master clock.*

AES Status LED (red) - Receiver Rx1 is "Active" but has an error. AES Signal will be muted. See "Errors Since Reset" for specific error.

12.4 Software Status Indicators The AES/EBU status is found under the Device Options>DSP Options menu:

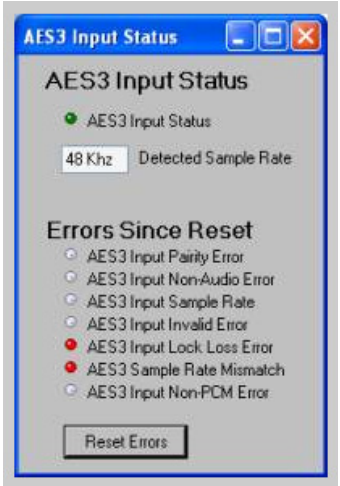

AES3 Software Control Panel

AES3 Input Status (green): Receiver is "Active" and has locked onto an incoming AES/EBU signal and data is ready for processing.

AES3 Input Status (red): Receiver is "Active" and has an error. See "Errors Since Reset" for specific error.

Detected Sample Rate: Sample rate at which the AES/EBU receiver is locked.

Errors Since Reset: This displays AES3 data errors that have occurred during run time. Error indications are latching, meaning they remain on even after the error condition has been corrected, useful when diagnosing intermittent problems. Error indications are cleared by pressing [Reset Errors] or by cycling power.

AES/EBU Parity Error: Parity error with incoming signal
AES/EBU Non-Audio Error: Incoming signal is not audio
AES/EBU Sample Rate: Unable to lock onto incoming frequency
AES/EBU Invalid Error: Incoming signal is invalid
AES/EBU Lock Loss Error: Unable to lock onto incoming signal, or lost lock of incoming signal
AES/EBU Sample Rate Mismatch: Receiver frequency does not match DSP frequency.
AES/EBU Non-PCM Error: Invalid AES format

**To use an OPAES2 or OPAES4 option in an nXe amplifier (no DSP), the OPDAC4 must also be ordered and installed by the factory. The OPDAC4 is not required on nXp models.*

❑ 13 NETWORK AUDIO OPTIONS

Ashly offers a CobraNet and Dante network audio interface module that must be factory installed on nXe and nXp amplifiers. AVB will become available from Ashly in the future.

13.1 CobraNet®

CobraNet is an Ethernet-based digital audio transport technology developed and supported by Cirrus Logic. It is a combination of software, hardware and network protocols which allows distribution of multiple channels of real-time, high quality digital audio over a standard Ethernet Network. Ashly nXe or nXp amplifiers can be ordered with a factory installed CobraNet module. Protea^ne software will auto-detect if CobraNet is installed. The amplifier [Input Source] tab presents the Cobranet audio routing and source controls as well as the status of individual receivers, bundles, and channels. For more detailed information, please search Protea^ne software on-line help, or visit the CobraNet home page.

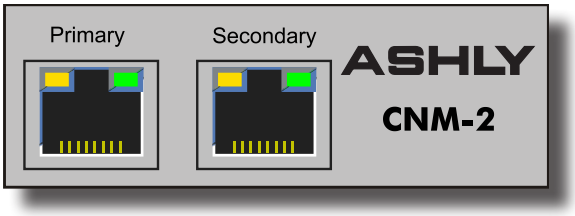

Basic Terminology

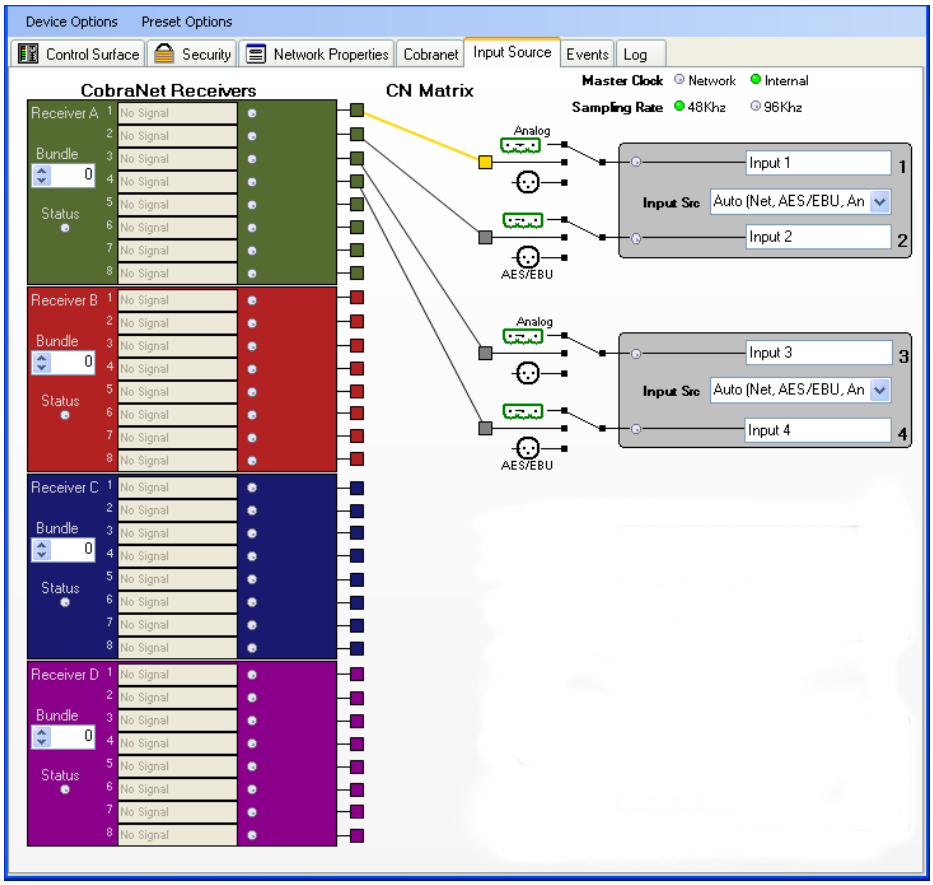

Cobranet Receiver: There are four receivers A, B, C, and D in amplifiers with CobraNet installed. Each receiver can receive one Cobranet bundle selected by the user. It is not necessary to use all receivers. Depending on how audio is sent from the CobraNet transmitter, a single receiver can be used and it's selected bundle and channels routed to individual amplifier inputs using the Cobranet matrix in the input source tab.

Cobranet Bundle: A Cobranet bundle is a group of up to eight audio channels which are transmitted together from a single Cobranet device and may be received by several Cobranet devices. Each bundle is assigned a bundle number. This number can be in the following ranges:

0: Bundle is disabled.

1 to 255: These are multicast bundles and are not recommended for most situations.

256 to 65279: These are normal unicast bundles and are most commonly used.

65280 to 65535: These are "private" bundles and should not be used.

Cobranet Channel: Each bundle can contain up to 8 audio streams, or Cobranet channels. They are labeled 1 to 8. The Cobranet channel number within the bundle that was assigned to the desired audio source is the same bundle and channel number that should be selected when extracting and routing that original source to an amplifier input channel.

CobraNet Receiver Control

Bundle: Selected bundle this receiver is listening to.

Status: Indicates if a valid (green) bundle is being received.

Channel Status (1-8): The Signal Status indicates the current bit depth, sampling rate, and latency of the received audio stream. The LED indicates this is a valid stream for this device. *The sampling rate and latency of the transmitting device must match that of the receiver.*

CN Matrix: The Cobranet matrix allows the user to route any of the channels being received to the desired amplifier inputs channels.

Input Source Selection: The user can select the input source type for each amplifier channel. For Cobranet, the selection must be either [Network with Analog Backup] or [Auto]. When Analog Backup is engaged the device will switch to analog when there is no valid CobraNet® data being received.

13.1a CobraNet Configuration Tab

A CobraNet Interface has several parameters that may need to be configured for proper operation. The "CobraNet Config" screen presents many of these networking controls as well as feedback as to the status of the CobraNet interface. It is also possible to view and modify these parameters via CobraNet Discovery.

General Configuration

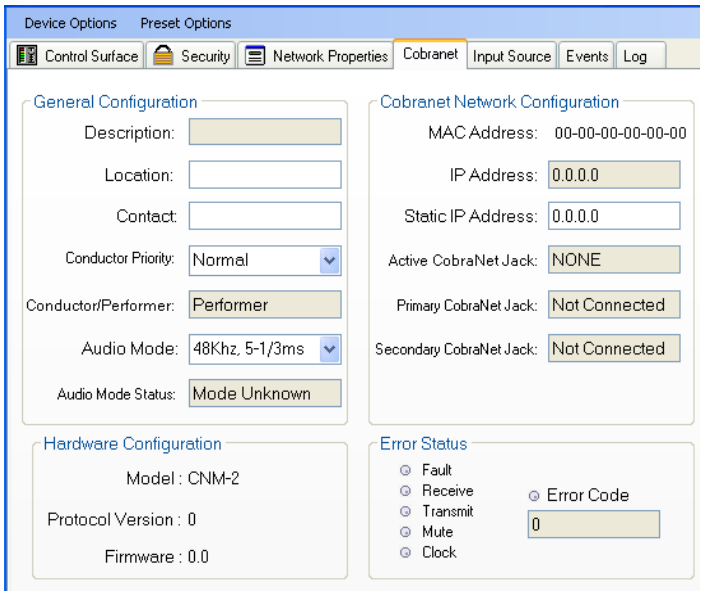

Description: Description of the Unit and its firmware.

Location: User-definable string typically indicating the location of the CobraNet device.

Contact: User-definable string typically indicating the contact person for the CobraNet device.

Conductor Priority: The higher the priority the more likely it is this unit will become the "Conductor". The Conductor is the master clock and all other clocks are synchronized to this clock.

Conductor/ Performer: Indicates if the unit is currently the conductor or a performer. There can be only one conductor on a CobraNet network.

Audio Mode: Sampling rate and latency for the device. *Both sending and receiving units must be configured for the same Audio Mode.*

Audio Mode Status: The current Audio Mode of the Unit. If a mode is not supported this status may not equal the selected mode.

Cobranet Network Configuration

MAC Address: The unique MAC address for the CobraNet interface. Note there is a separate MAC address for the control-only interface. Both primary and secondary ports share the same MAC address.

IP Address: The current IP address for the CobraNet interface.

Static IP Address: When set to an addressable IP address (not 0.0.0.0) this is the IP address used by the CobraNet device on the CobraNet ports. When this is 0.0.0.0, auto configuration is used by the CobraNet device to obtain an IP address. This IP address can be provided by either BOOTP/DHCP or CobraNet Discovery (which uses RARP).

Active CobraNet Jack: Shows which of the two CobraNet jacks is currently active (only one can be active at a time).

Primary CobraNet Jack: Shows the status of the primary CobraNet jack.

Secondary CobraNet Jack: Shows the status of the secondary CobraNet jack.

Error Indicators

Fault: A serious fault has occurred.

Receive: An error has occurred in the reception of a packet. Not necessarily a problem.

Transmit: An error has occurred in the transmission of a packet.

Mute: The interface is muting the outputs.

Clock: There is a problem with the Master Clock.

Error Code: Indicates a more detailed error code which can be looked up in the CobraNet Programmer's Manual.

13.2 Dante® Network Audio

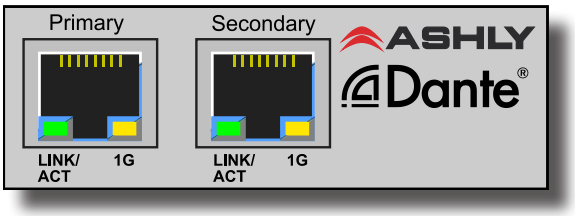

Dante, created by Audinate, is an Ethernet based digital AV network technology that uses existing 100MB or 1GB network infrastructure for delivery of high performance, high channel count audio signals. Ashly products with network audio capability can be integrated into a Dante digital audio system by purchasing our OPTDante module as a factory installed option, and controlled using Protea^ne software.

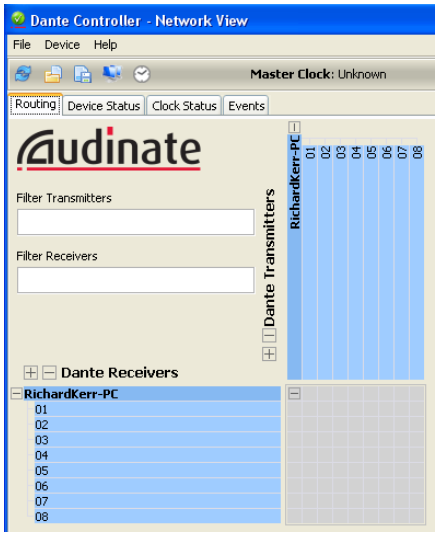

Dante Controller Transmitter/Receiver Matrix

Dante Controller (shown to right)**:** Configuration of Dante audio streams requires the use of Dante Controller. This free software from Audinate is available for Windows® and Mac®. Dante Controller allows you to connect network audio receivers and transmitters together using a simple matrix. The OPTDante option allows nXe or nXp amplifiers to receive Dante network audio. Additionally, nXp models can transmit Dante signals from the amplifier's post-DSP input channels.

Dante Receiver (shown below)**:** Use Protea^ne software to set up nXe or nXp inputs for use with Dante. Go to the amplifier's Input Source tab and select Network with Analog Backup as shown below. This connects Dante transmitter channels that were assigned in Dante Controller to the amplifier inputs. If the Dante transmitter source becomes unavailable, the amplifier input will automatically switch to it's analog input source.

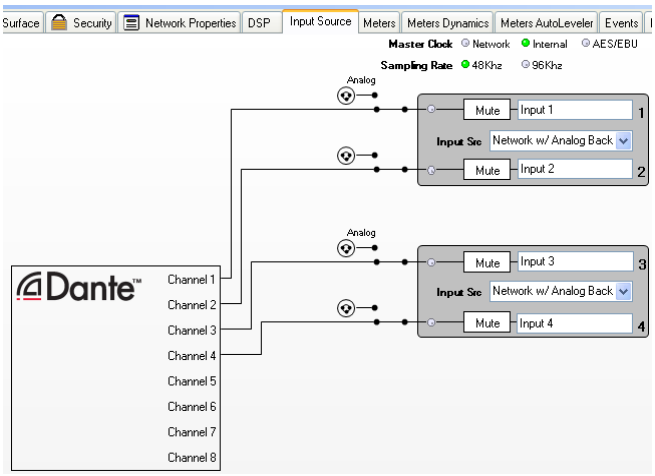

Dante Receiver Setup in Protea^ne Software

Dante Transmitter (not shown)**:** Newer nXp models (not nXe) with Dante installed can now transmit Dante signal from each input channel, post-input DSP. Visit the Ashly website Knowledge Base to view a document listing the beginning serial numbers of Dante-transmit capable nXp amplifiers. Dante transmitter signals are taken following each input channel's DSP section, but before routing and the matrix mixer. Protea^ne software does not show Dante transmitter status. Dante Controller automatically displays all available nXp transmitter channels.

Dante Virtual Soundcard (not shown)**:** The Dante Virtual Soundcard, purchased separately from Audinate, allows Windows and Mac computers to act as a Dante audio source. Any sound the computer can generate (background music, announcements, VoIP sessions, etc.) can be routed to a Dante receiver via the Dante Controller.

❑ 14 nX AMPLIFIER TROUBLESHOOTING

No AC Power
1) Is the detachable AC power cord properly installed? Is it plugged into a known live outlet?
2) Has the power switch been disabled? (sec 4.7, 9.4a, 10.2)
3) Is the Power-On Delay time set high? (sec 3, 9.2c)
4) Is the amp asleep? (sec 4.6)

No Amplifier Output
1) Is the amplifier in Standby Mode? (sec 4.7, 6.3, 9.4a, 10.1)
2) Is there signal getting to the amplifier?
3) Is the input signal properly wired (sec 2.2)?
4) Are output connectors properly wired (sec 2.3, 5.6)
5) Are front panel, remote control, or software attenuators turned down?
6) Is the amp channel muted from within the control surface, DSP section, remote control, output mixer, or event scheduler?
7) Are dynamics or gain tool settings in the DSP section allowing signal to pass properly?
8) Is the signal properly routed to the desired output in the DSP Matrix Router? (sec 9.4d)
9) Is the fader level set properly in the DSP Matrix Mixer? (sec 9.4d)
10) If using a DSP crossover on the outputs, are the filter frequency settings correct?
11) Did the event scheduler mute an output, change a preset or output channel source? (sec 9.4g)
12) Is the Amplifier in Protect Mode? see below, or (sec 4.6)

Protect LED is On (LED ERROR CODES)
1) ***Does the amp still function, (fan still running)***? If so, one or more channels of the amplifier is applying live countermeasures to compensate for overheating, power limiting, or a power supply voltage fault condition. The amp will continue to operate in a reduced capacity until the fault condition is no longer present. Countermeasures include automatic attenuation of overheated or excessive output power, and treatments for DC power supply voltage irregularities.

2) ***Has the amp shut down (fan stopped) with protect, sleep, and power switch LEDs all on?*** If so, a critical situation has triggered a fail-safe fault response, latching the amplifier into its shut-down state. AC power must be cycled to recover from this state. These conditions may be due to internal component failure, so *before cycling power, disconnect all speaker loads*. The three critical fault conditions are:

A) Power Supply Fault - If protect, sleep, and power LED are on, *and* one or more channel's clip/mute LED is also on, there is a power supply voltage fault condition on the muted channel(s).

B) Output DC Fault - If protect, sleep, and power LED are on, and one or more channel's clip/mute LED *and* signal LED are also on, there is a DC output fault on the indicated channel(s).

C) High Temperature Fault - If protect, sleep, and power LED are on, and one or more channel's clip/mute LED *and* temp LED are also on, there is a high temperature fault on the indicated channels that could not be compensated for using countermeasures.

D) Microcontroller Thermal Fault - If protect, sleep, and power LED are on, and the temp and clip LEDs are lit on all channels, there is a micro-controller thermal fault. This is not likely to occur unless the fan(s) fail and/or the amp is running in an unventilated environment.

3) ***Has the amp shut down (fans stopped) with Protect, Power Switch LED and Clip/Mute LEDs all on?*** If so, this indicates that the power supply has shut down due to excessively high or low AC Mains voltage. The amplifier will automatically recover as soon as the AC voltage returns to a safe operating level. (See sec 15 - Operating Voltage Range)

If the protect, sleep, and power switch LED remain lit after cycling power, after the amplifier is allowed to cool, and after verifying that the AC mains are within an acceptable range, the critical fault condition still remains and the amplifier may require servicing.

Clip/Mute LED Stays On
1) Is the front panel level control, Remote DC Level, or software control surface fader fully off?
2) Is the amplifier muted from software, a remote control devices, or an event scheduler action?

Attenuators Don't Work
1) Are the front panel or remote attenuators disabled? (sec 4.4, 9.4a)

Amplifier Not Recognized in Protea^ne Software
1) Is the PC successfully communicating with the network? (sec 8)
2) Is the amplifier successfully communicating with the network? (sec 8)
3) Does the amplifier name appear as green text in the Ashly Network device tree? (sec 9.1a)
4) Is the amplifier device icon placed on the software project canvas a *virtual device* instead of a live amp? *Any virtual device MAC address will always read FF-FF-FF-FF-FF-FF.* (sec 9.1b)
5) Was the amplifier IP address auto-detected (recommended) or manually assigned? (sec 8.1)
6) Is firewall software blocking initial communication from the device? (sec 8.2)

Unable to Access Software Functions
1) Is the desired level of access granted to the current user in the security tab? (sec 9.4b)

Unable to Load Enough DSP Tools
1) Is the sample rate set to 96kHz? (sec 9.2h)
2) Graphic Equalizers have a much greater DSP "cost" than Parametric Filters. The Feedback Suppressor uses even more DSP than the Graphic EQ. Use only as much EQ as is needed.
3) Speaker Delay uses less resources than Delay

Can't Use Any DSP Tools On Input or Output Channels
1) Has Input, Mixer, or Output channel DSP been disabled under Device Options? (sec 9.2j)

Event Scheduler Action Does Not Work
1) Does the amplifier's date/time match that of the PC running software? (sec 9.4g)
2) Did you click the [Update Event] button after editing events?

Remote Control Troubleshooting

WR-5 or RD-8C Doesn't Work Properly
1) Is the remote wired correctly to the amplifier Data connector?
2) If the WR-5 is the last one in series, even if it is the only one used, is the two pin jumper properly placed on the circuit board header as shown?
3) Is the remote assigned its own unique device ID from within its device window?
4) If using WR-5 for gain control, is there a (ne)WR-5 Remote Gain function in a DSP gain block on the channel to be controlled?
5) The remote and it's data signal can be negatively affected by static discharge when touched. Refer to the remote owner's manual for proper earth grounding.

neWR-5 or FR-8/16 Doesn't Work Properly
1) Is the remote successfully communicating with the network?
2) Is the remote connected to a switch, hub, router, or power injector providing sufficient Power Over Ethernet (PoE), or using an external power supply?
3) Is the remote assigned within its device window to control the desired amplifier?
4) Is the hardware lockout switch being used, disabling all buttons?
5) If using neWR-5 for gain control, be sure to install a (ne)WR-5 Remote Gain function in a DSP gain block on the channel to be controlled.
6) The remote and it's data signal can be negatively affected by static discharge when touched. Refer to the remote owner's manual for proper earth grounding.

❑ 15 nX AMPLIFIER SPECIFICATIONS

General Power Amplifier Specifications

(0dBu = 0.775V rms)

nX Amplifier Model	nX3.04	nX3.02	nX1.54	nX1.52	nX8004	nX8002	nX4004	nX4002
Maximum Output Power								
CEA-2006/490A, 20ms 1kHz 1%THD+N, 480ms 1kHz -20dB, 120VAC, all channels driven at rated load								
Low Z output, per channel								
2 Ohm	3000W	3000W	1500W	1500W	800W	800W	400W	400W
4 Ohm	2000W	2000W	1500W	1500W	800W	800W	400W	400W
8 Ohm	1250W	1250W	1250W	1250W	800W	800W	400W	400W
Low Z output, per bridged channel pair*								
4 Ohm	6000W*	6000W*	3000W*	3000W*	1600W*	1600W*	800W	800W
8 Ohm	4000W*	4000W*	3000W*	3000W*	1600W*	1600W*	800W	800W
70V, 100V output, per channel								
70V	2450W	2450W	1500W	1500W	800W	800W	400W	400W
100V	1250W	1250W	1250W	1250W	800W	800W	400W	400W
70V, 100V output, per bridged channel pair*								
140V	4900W*	4900W*	3000W*	3000W*	1600W*	1600W*	800W*	800W*
200V	2500W*	2500W*	2500W*	2500W*	1600W*	1600W*	800W*	800W*

**May require Class 3 speaker wiring, all others use Class 2 wiring. See* section 2.3

Total AC Mains Power Draw - *Typical input, all channels driven, 120VAC*								
Sleep	<1W	<1W	<1W	<1W	<1W	<1W	<1W	<1W
Standby	70W	40W	70W	40W	40W	25W	40W	25W
Idle (no signal)	100W	55W	100W	55W	70W	40W	70W	40W
1/8 max power, 70V	1880W	940W	1250W	625W	685W	345	375	190
1/8 max power, 100V	1040W	520W	1040W	520W	685W	345	375	190
1/8 max power, 8 Ohm	1040W	520W	1040W	520W	685W	345	375	190
1/8 max power, 4 Ohm	1540W	770W	1250W	625W	685W	345	375	190
1/8 max power, 2 Ohm	2300W	1150W	1250W	625W	685W	345	375	190

AC Mains Current Draw - *Typical input, all channels driven, 120VAC (divide in half for 240V)*								
Sleep mode	100mA	100mA	100mA	100mA	100mA	100mA	100mA	100mA
Standby mode	1.30A	0.70A	1.30A	0.70A	0.70A	0.38A	0.70A	0.38A
Idle (no signal)	1.85A	1.00A	1.85A	1.00A	1.30A	0.70A	1.30A	0.70A
1/8 max power, 70V	24.1A	12.1A	16.0A	8.0A	8.8A	4.6A	5.0A	2.6A
1/8 max power, 100V	13.4A	6.7A	13.4A	6.7A	8.8A	4.6A	5.0A	2.6A
1/8 max power, 8 Ohm	13.4A	6.7A	13.4A	6.7A	8.8A	4.6A	5.0A	2.6A
1/8 max power, 4 Ohm	19.7A	9.9A	16.0A	8.0A	8.8A	4.6A	5.0A	2.6A
1/8 max power, 2 Ohm	29.5A	14.7A	16.0A	8.0A	8.8A	4.6A	5.0A	2.6A

Thermal Dissipation *in BTU/hour with typical input, all channels driven, 120VAC*								
Sleep mode	3.4	3.4	3.4	3.4	3.4	3.4	3.4	3.4
Standby mode	238	136	238	136	136	85	136	85
Idle (no signal)	340	187	340	187	238	136	238	136
1/8 max power, 70V	2220	1110	1700	850	970	495	595	305
1/8 max power, 100V	1420	710	1420	710	970	495	595	305
1/8 max power, 8 Ohm	1420	710	1420	710	970	495	595	305
1/8 max power, 4 Ohm	1810	905	1700	850	970	495	595	305
1/8 max power, 2 Ohm	2720	1360	1700	850	970	495	595	305

Input Sensitivity - *in Volts and dBu, per back panel DIP Switch gain and Output Mode settings, per model, 0dBu = 0.775V rms*

	Low Z (3.0x)	Low Z (1.5x)	Low Z (800x)	Low Z (400x)	70V (all)	100V (all)
@26dB gain	3.9V (+14dBu)	2.7V (+11dBu)	2.0V(+8.2dBu)	1.4V(+5.1dBu)	3.5V (+13dBu)	5.0V (+16dBu)
@32dB gain	1.9V (+7.8dBu)	1.4V (+5.1dBu)	1.0V(+2.2dBu)	0.71V(-0.8dBu)	1.8V (+7.3dBu)	2.5V (+10dBu)
@38dB gain	0.97V (+2dBu)	0.68V (-1.1dBu)	0.5V(-3.8dBu)	0.35V(-6.9dBu)	0.88V (+1.1dBu)	1.3V (+4.5dBu)
@1.4V gain	1.4V (+5.1dBu)	1.4V (+5.1dBu)	1.4V (+5.1dBu)	1.4V (+5.1dBu)	1.4V (+5.1dBu)	1.4V (+5.1dBu)

Distortion (SMPTE, typical)	<0.5%
Distortion (THD-N, typical)	
(8 Ohm, 10dB below rated power, 20Hz-20kHz)	<0.5%
Signal to Noise (26dB input sensitivity, 20Hz-20kHz, unweighted)	>114dB (3.0x models), >111dB (1.5x models) >108dB (800x models), >105dB (400x models)
Frequency Response	20Hz-20kHz, +/-0.05dB
Channel Separation (dB from full output, 1kHz)	-75dB
Damping Factor (8 Ohm load, <1kHz)	>250
Balanced Input Connector (per channel)	Euroblock (3.5mm), 1/4" TRS and XLR Combo jack
Input Impedance	10k Ohm
Maximum Input Level	+21dBu
Bridge Mode Switch (per channel pair)	In for bridged mode, Out for stereo
Remote DC Level Control (G, CV, V+ per channel)	Euroblock (3.5mm), V+ is fully on, G is fully attenuated
DIP Switch settings (per channel)	
Switches 1-2: Output Mode	Low Z, 70V, 100V output
Switches 3-4: Input Gain	26dB, 32dB, 38dB, 1.4V
Switch 5: Output Clip Limiter	On, Off
Switch 6: Input High Pass Filter	80Hz 2nd order HPF - On, Off
Speaker Output Connector (per channel)	Neutrik SpeakON® NL4MD-H-2

nXe and nXp Models Only:

Control Network	100MB Ethernet, RJ-45 connector
Remote Standby Contact Closure	Euroblock (3.5mm) - close contact pin to G for standby mode
Fault Logic Output (per channel)	Euroblock (3.5mm) - fault indicated by loss of 1Hz, 5V pulse signal
Fault Conditions	AC mains voltage, excessive internal temperature, power supply voltage out of range, DC on output, microprocessor malfunction
(+5V and G pins available for logic sink and source)	
Maximum Fault Pin Source Current	20mA
Maximum Fault Pin Sink Current	200mA
Preset Recall Contact Closure	Euroblock (3.5mm) - close contact to GND for preset 1-4 recall
Data Connection	Euroblock (3.5mm) - Gnd, +18V, Data Out, Data In
AUX Output Connector	Balanced Euroblock (3.5mm)
AUX Output on two channel models	AUX A & B use amp ch 1-2 signal, *or* use matrix mixer if DSP installed
AUX Outputs on four channel models	AUX A, B, C, D use amp ch 1-4 signal, post DSP if installed
AUX Output Maximum Level	+21dBu
Network Audio Options (factory installed only)	Dante (receive nXe & nXp, transmit nXp only), CobraNet
Digital I/O Option	AES3, two or four channel with zero-latency pass-through

Front Panel Indicators	
Power Switch LED (white)	On, Off, Standby (flashing)
Clip/Mute LED (red)	Per Channel - Clip @ 1dB below full output, Mute
Signal LED (green)	Per Channel - -18dB below rated output
Current LED (green)	Per Channel - Brightness is proportional to output current
Temp LED (yellow)	Per Channel - On dim at 90% of maximum operating temperature On full bright at 100% maximum operating temp, + protect
Bridge LED (green)	Per Channel Pair - On, Off
Protect LED (red)	On for fault condition countermeasures or shut-down, Off
(See Troubleshooting section for Protect LED error codes)	
Sleep LED (blue)	On when amp is asleep, on briefly when sleep mode is enabled
Disable LED (yellow)	On when front panel controls are disabled, Off
Com LED (green)	On for Ethernet activity or displaying Device ID
Attenuators	Per channel: front panel, software, offset link group, and remote control. *Fully off = Mute*
Amplifier Protection	In-rush current, over-temperature, output DC, output over-power, AC mains voltage, mains fuses

Cooling	Continuously variable temperature controlled axial fan(s)
Power Cable Connector	20A powerCON® (32A powerCON® on 3.04 model only)
Operating Voltage Range (50-60Hz, 85VAC or 170VAC minimum startup)	70-135VAC @110-120VAC, or 140-270VAC @220-240VAC
Environmental	32°F-120°F, (0°C-49°C) noncondensing
Unit Dimensions (all models)	19”W x 3.5”H x 16.84”D (483 x 89 x 428mm)
Unit Weight by nX Model	4002/8002 21.5lbs (9.75kg), 1.52/3.02 22.0lbs (10kg) 4004/8004 25.2lbs (11.4kg), 1.54/3.04 28.0lbs (12.7kg)
Shipping Dimensions (all models)	24.5" x 22" x 5.25" (622mm x 559mm x 133mm)
Shipping Weight by nX Model	4002/8002 27.6lbs (12.5kg), 1.52/3.02 28.01lbs (12.8kg) 4004/8004 31.3lbs (14.2kg), 1.54/3.04 34.1lbs (15.5kg)
Safety/Compliance	cTUVus, CE, FCC Class B, RoHS

Protea DSP Specifications *(nXp models only)*

Input Source Selection

Input Source Select Options	Analog, Auto (net, AES3, analog)

Dynamics

Brick Wall Limiter

Threshold	-20dBu to +20dBu
Ratio	infinite
Attack	0.2ms/dB to 50 ms/dB
Release 5ms/dB to 1000ms/dB	

Compressor

Threshold	-20dBu to +20dBu
Ratio	1.2:1 to infinite
Attack	0.2ms/dB to 50ms/dB
Release 5ms/dB to 1000ms/dB	
Detector	Peak/Average
Attenuation Bus	2 available
Metering	In, Out, Attenuation, superimpose on graph

Autoleveler

Target Level	-40dBu to +20dBu
Action	gentle, normal, aggressive, user defined
Maximum Gain	0dB to +22dB
Metering	Input, Gain, Attenuation

Advanced Autoleveler Controls

Ratio	1.2:1 to 10:1
Threshold Below Target	-30dB to 0dB
Gain Increase Rate	5ms/dB to 1000ms/dB
Gain Decrease Rate	5ms/dB to 1000ms/dB
Hold Time	0-6s

Ambient Noise Compensation (Output Only)

Max Gain	-20dB to +20dB
Min/Base Gain	-40dB to +20dB
Gain Change Rate	0.2s/dB to 20s/dB
Link Group	16 available
ANC Input Channel	1-2 or 1-4
Noise Threshold	-40dBu to +20dBu
Program/Ambient Gain Ratio	0.3:1 to 3:1
Metering	Input level, Attenuation, Average noise

Ducker

Ducking Type	high/low priority, trigger, filibuster, ducked program
Trigger Threshold	-80dBu to +20dBu
Ducking Release	5ms/dB to 1000ms/dB
Ducking Depth	0dB to -30dB, -∞
Enable Ducking at Matrix Mixer	Yes
Metering	Input

Gate

Threshold	-80dBu to +20dBu
Range	off, 100dB to 0dB
Attack	0.2ms/dB to 50ms/dB
Release 5ms/dB to 1000ms/dB	
Metering	Key Signal, Gate LED superimpose on graph

Advanced Gate Controls

Key Engage Enable	Yes
Key Frequency	20Hz to 20kHz
Key Bandwidth	0.016 to 3.995 octave

Gain

Gain	-50dB to +12dB, off, polarity invert
Gain w/VCA	-50dB to +12dB, off, polarity invert
Digital VCA Groups	4 available

Remote Gain

(Remote RD8C Level Control)	Enable, Disable
Metering	RD8C Active LED

WR-5 (neWR-5) Remote Gain	0 to -50dB, Mute

Equalization

31 Band Graphic

Filter Type	constant or proportional Q
Bandwidth	0.499 to 0.25 octave

2, 4, 6, or 10 Band Parametric Equalizers
Filter Types:

Parametric:
Frequency. 20Hz-20kHz
Level -30dB to +15dB
Q Value. . . . . 92.436 to 0.267

Hi/Low Shelf 6/12 dB/oct
Frequency. 20Hz-20kHz
Level -15dB to +15dB

All Pass
Frequency. 20Hz-20kHz

Variable Q HP/LP
Frequency. 20Hz-20kHz
Q Value. . . . . 3.047 to 0.267

Notch/Bandpass
Frequency. 20Hz-20kHz
Q Value. . . . . 92.436 to 0.267

Feedback Suppressor (FBS) *Input only, 48kHz only*
(Output FIR filter is disabled on channel using input FBS)
Filters 12
In/Out per filter . . . . . yes
Lock per filter and global lock . . . yes
Filter Modes. . . . . Float, Restricted, Manual
Filter Type . . . . . Notch, Parametric
Filter Frequency Range . . . . . 20Hz to 20kHz
Filter Level
Notch Filter . . . . . -∞
Parametric Filter. . . . . -30dB to +15dB
Filter Bandwidth . . . . . 0.016 to 3.995 octave
Detector Sensitivity . . . . . five levels
Float Time . . . . . 5 minutes to 24 hours

FIR Filter (FIR) *Output only, 48kHz only, 2-384 taps*
(input FBS is disabled on channel using output FIR)
File types . . . . . *.csv, *.fir

Crossover

2 Way, 3 Way, 4 Way Crossover
High Pass/Low Pass Filters
Filter Types:
Bessel 12, 18, 24, 48dB/octave
Butterworth 12, 18, 24, 48dB/octave
Linkwitz-Riley 12, 24, 48dB/octave
Frequency. . . . . off, 20Hz-20kHz

Delay

Adjustment Parameters . . . . . time (ms), distance (ft, m)
Temperature Adjust . . . . . -22°F to +122°F
(-30°C to +50°C)

Maximum Time and Distance @ 48kHz Sample Rate, 72°F:
Speaker Delay 0-21ms (24ft, 7.3m)
Delay 0-682ms (771ft, 235m)
Maximum Time and Distance @ 96kHz Sample Rate, 72°F:
Speaker Delay 0-10.6ms (11.8ft, 3.6m)
Delay 0-341ms (378ft, 115m)

Tools

Audio Meter
Range: -60dBu to +20dBu
Increments:. 1dB
Peak Hold Indicator: . . . . . yes
Signal Generator: . . . . . pink noise, white noise, sine wave
Signal Level: . . . . . off, -50dBu to +20dBu
Sine Wave Frequency: 20Hz-12kHz

Matrix Mixer

Gain: . . . . . Off., -50 to +12dB, in 0.5dB increments
Mute . . . . . per channel
Auto-mixer Enabled . . . . . per channel
Global Auto-mixer Response . . . . 0.01s to 2s
Enable Ducking at Mixer . . . . . yes
Ducking LED . . . . . per channel if enabled
Metering . . . . . level, auto-mixer level

Linking

All DSP functions can be linked to 1 of 16 link groups

Processors

Input A/D: . . . . . 24 bit
Output D/A: . . . . . 24 bit
DSP Processors: . . . . . 32-bit floating point
Sample Rates: 48kHz, 96kHz
Propagation Delay @ 48kHz: 1.42ms
Propagation Delay @ 96kHz: . . . 0.71ms

Other Software Specifications *(nXe and nXp models)*

Security

Passworded User Names. . . . . 5 ID slots available
Security Access Levels . . . . . 8 levels available from full access to view only

Event Scheduler

Maximum Number of Events 100
Maximum Event Calendar . . . . . 1 week
Event Time Resolution . . . . . 1 minute
Event Time Reference. . . . . User defined, Set to PC
Event Types. . . . . Preset Recall
Power Change
Channel Mute
Output Source Select
WR-5 Level Change

***Remote Control Options** (see block diagrams)*

nX Series	WR-1 DC level control
nXe Series	WR-1 DC level control WR-1.5 DC level control/preset recall WR-2 Preset recall WR-5 serial programmable button controller (preset recall and mute only) neWR-5 Ethernet programmable button controller (preset recall and mute only) Ashly Remote iPad app (preset recall and mute only)
nXp Series	WR-1 DC level control WR-1.5 DC level control/preset recall WR-2 Preset recall WR-5 serial programmable button controller neWR-5 Ethernet programmable button controller Ashly Remote iPad app RD(RW)-8C serial data fader controller FR-8/FR-16 Ethernet fader controller

❑ 16 LIMITED WARRANTY (USA ONLY)

(Other countries please contact your respective distributor or dealer.)

For units purchased in the USA, warranty service for this unit shall be provided by ASHLY AUDIO, INC. in accordance with the following warranty statement.

ASHLY AUDIO, INC. warrants to the owner of this product that it will be free from defects in workmanship and materials for a period of FIVE years from the original-date-of-purchase, with the exception of touch-screen displays and motorized faders which are warrantied for THREE years from the original-date-of-purchase.

ASHLY AUDIO INC. will without charge, repair or replace at its discretion, any defective product or component parts upon prepaid delivery of the product to the ASHLY AUDIO, INC. factory service department, accompanied with a proof of original-date-of-purchase in the form of a valid sales receipt. This warranty gives you specific legal rights, and you may also have other rights, which vary from state to state.

EXCLUSIONS: This warranty does not apply in the event of misuse, neglect, or as a result of unauthorized alterations or repairs made to the product. This warranty is void if the serial number is altered, defaced, or removed. ASHLY AUDIO, INC. reserves the right to make changes in design, or make additions to, or improvements upon, this product without any obligation to install the same on products previously manufactured.

Any implied warranties, which may arise under the operation of state law, shall be effective only for FIVE years (THREE years for touch-screen displays and motorized faders) from the original-date-of-purchase of the product. ASHLY AUDIO, INC. shall be obligated to only correct defects in the product itself. ASHLY AUDIO, INC. is not liable for any damage or injury, which may result from, or be incidental to, or a consequence of, such defects. Some states do not allow limitations on how long an implied warranty lasts, or the exclusion, or limitation of incidental or consequential damages, so the above limitations or exclusions may not apply to you.

OBTAINING WARRANTY SERVICE:

For warranty service in the United States, please follow this procedure:

1) Return the product to ASHLY AUDIO, INC. freight prepaid, with a written statement describing the defect and application that the product is used in. ASHLY AUDIO, INC. will examine the product and perform any necessary service, including replacement of defective parts, at no further cost to you.

2) Ship your product to:

ASHLY AUDIO, INC.
Attention: Service Department
847 Holt Road
Webster, NY 14580-9103

❑ 17 nX, nXe, and nXp BLOCK DIAGRAMS

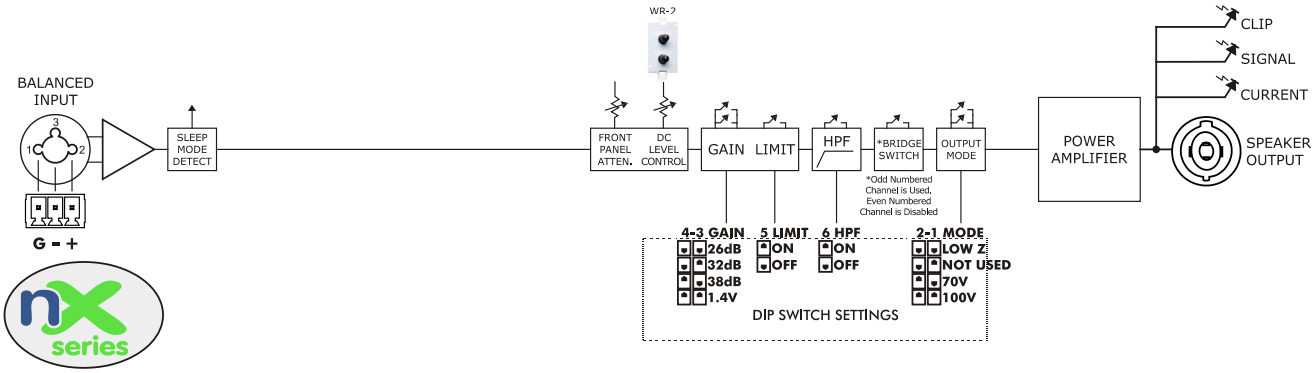

- nX Series has programmable output modes, automatic sensing 120VAC-240VAC switch mode power supply, remote DC level control, defeatable sleep mode and front panel disable, plus switchable gain, limiter, high-pass filter, and bridge mode.
- *nX Series has no Ethernet control, DSP, AES3 or network audio options, or aux outputs*.

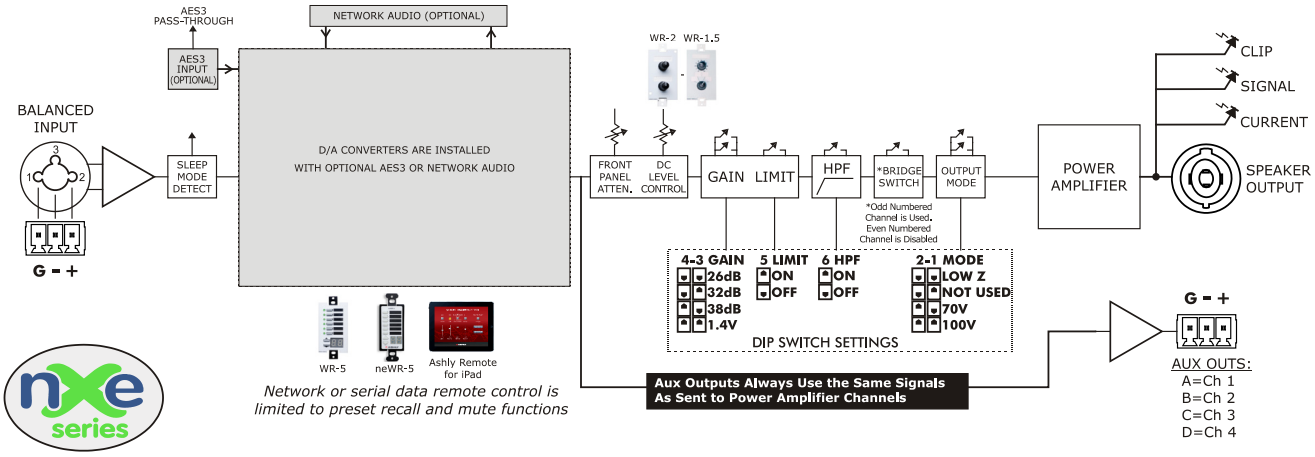

- nXe Series adds Ethernet control, limited network and serial data remote control, aux outputs, optional AES3 or network audio inputs.
- nXe also adds input source select with failover to analog, remote power standby, remote preset recall, real time event scheduler, passworded security, fault logic output, and preset management.

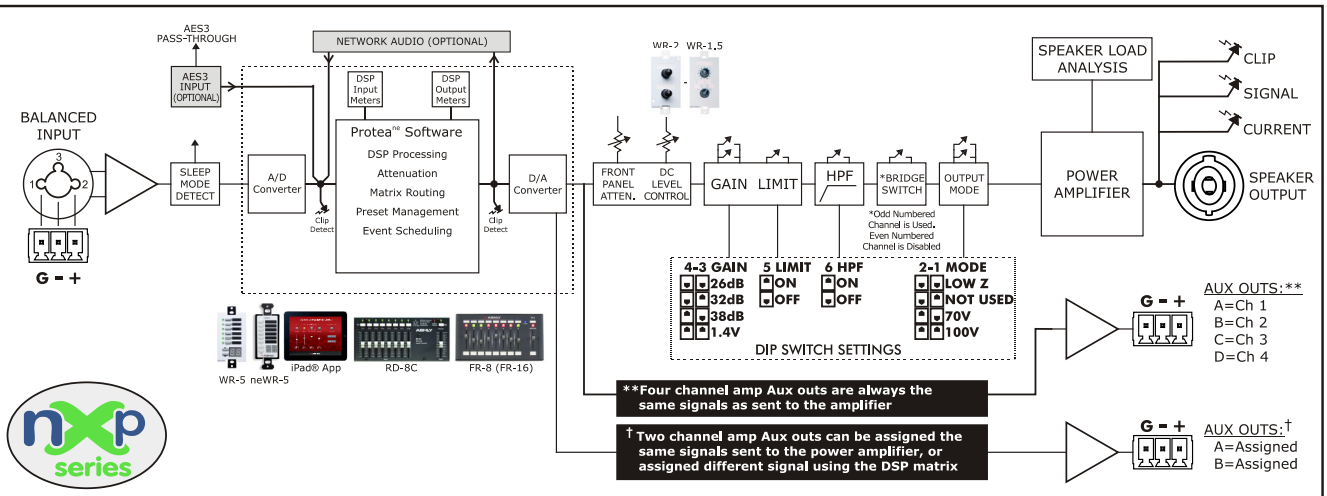

- nXP Series adds comprehensive Protea DSP with matrix routing, swept speaker load impedance analysis, and assignable aux outputs†.
- nXP also offers in depth remote control using the Ashly WR-5, neWR-5, Ashly Remote app for iPad®, RD-8C, and FR-8/16.

ASHLY AUDIO INC. 847 Holt Road Webster, NY 14580-9103, USA

Phone: (585) 872-0010 Fax: (585) 872-0739

Toll Free (800) 828-6308 www.ashly.com

©2017-2018 Ashly Audio, Inc. All rights reserved worldwide.

Ashly Audio is a division of Jam Industries, Ltd.

All features, specifications, and graphical representations are subject to change or improvement without notice.

Printed in USA

nX 0518 R10